C.I.P.	7 mm Zentile Country of Origin: IT	TAB.	I
		Date	18-10-17
		Revision	19-05-22

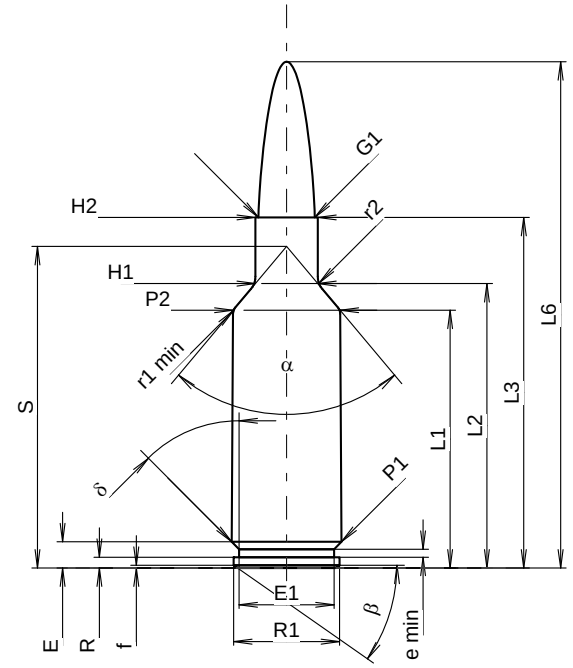

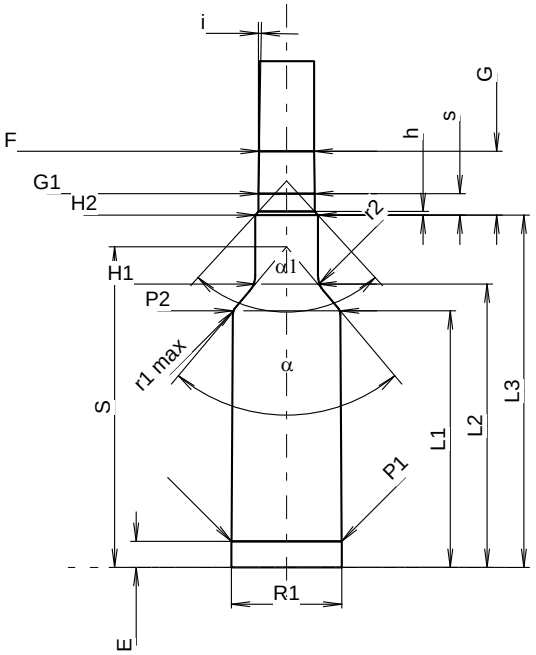

Scale 1.03:1

CARTRIDGE MAXI

Lengths

L1 1)	=	33.09	-0.20
L2 1)	=	36.52	-0.20
L3 1)	=	45.00	
L4	=		
L5	=		
L6	=	65.00	

Case Head

R	=	1.37
R1	=	13.59
R3	=	
E	=	3.36
E1	=	12.19
e min	=	1.02
δ	=	45°
f	=	0.36
β	=	35°

Powder Chamber

P1	=	14.12	
P2 1)*	=	13.76	-0.20

Junction Cone

α *	=	80°
S *	=	41.28
r1 min	=	1.27
r2	=	2.50

Collar

H1 *	=	8.00
H2 1)	=	8.00

Projectile

G1 1)	=	7.23
G2	=	
F	=	
L3+G 1)	=	53.19

Pressures (Energies)
Method Transducer

Pmax	=	4400	bar
PK	=	5060	bar
PE	=	5500	bar
M	=	25.00	
EE	=	3700	Joule

Miscellaneous Dimensions

Fe 1)3)	=	0.10
delta L	=	0.12

CHAMBER MINI

Lengths

L1	=	32.95
L2	=	36.37
L3 1)	=	45.25

Breech

R	=	
R1	=	14.19
R2	=	
R3	=	
r	=	

Powder Chamber

E	=	3.35
P1 1)	=	14.15
P2 *	=	13.79

Junction Cone

α 1)*	=	80°
S *	=	41.17
r1 max	=	1.27
r2	=	3.05

Collar

H1 *	=	8.05
H2 1)	=	8.05

Commencement of Rifling

G1 1)*	=	7.23
G 1)	=	8.19
α1	=	85°
h	=	0.45
s *	=	2.75
i 1)*	=	1°
w	=	

Barrel

F 1)*	=	7.04
Z 1)	=	7.21

Grooves

b	=	2.79	
N	=	6	
u	=	241.00	
Q	=	40.39	mm²

Dimensions in << mm >>
Dimensions and Tolerances for Proof Barrels
see Appendix CR1.

Notes:
1) Check for safety reasons
3) Headspace on Shoulder
* Basic dimensions