C.I.P.	375 Fl. N.E. 2"1/2 Country of Origin: GB	TAB. II Date 84-06-14 Revision 22-04-26

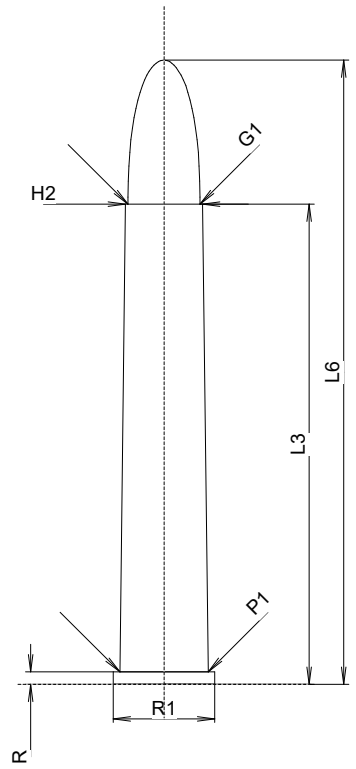

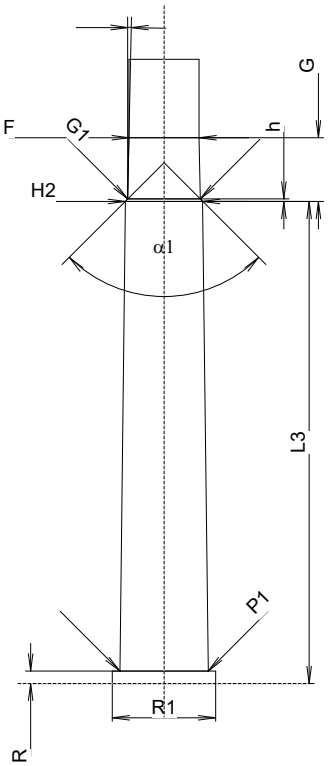

Scale 1:1

CARTRIDGE MAXI

Lengths

L1	=		
L2	=		
L3 1)	=	63.50	
L4	=		
L5	=		
L6	=	82.55	

Case Head

R 1)	=	1.65	-0.25
R1	=	13.41	
R3	=		
E	=		
E1	=		
e min	=		
δ	=	0°	
f	=		
β	=	45°	

Powder Chamber

P1	=	11.68
P2	=	

Junction Cone

α	=	
S	=	
r1 min	=	
r2	=	

Collar

H1	=	
H2 1)	=	10.19

Projectile

G1 1)	=	9.52
G2	=	
F	=	
L3+G 1)	=	71.92

Pressures (Energies)
Method Transducer

Pmax	=	2200	bar
PK	=	2530	bar
PE	=	2750	bar
M	=	25.00	
EE	=	3220	Joule

Miscellaneous Dimensions

Fe 1)4)	=	0.15
delta L	=	

CHAMBER MINI

Lengths

L1	=	
L2	=	
L3 1)	=	63.75

Breech

R 1)	=	1.65
R1	=	13.67
R2	=	
R3	=	
r	=	

Powder Chamber

E	=	
P1 1)	=	11.68
P2	=	

Junction Cone

α	=	
S	=	
r1 max	=	
r2	=	

Collar

H1	=	
H2 1)	=	10.21

Commencement of Rifling

G1 1)*	=	9.58	
G 1)*	=	8.42	
α1	=	90°	
h *	=	0.32	
s	=		
i 1)	=	1°10'	
w	=		

Barrel

F 1)*	=	9.25
Z 1)	=	9.50

Grooves

b	=	2.92	
N	=	6	
u	=	475.00	
Q	=	69.43	mm²

Dimensions in << mm >>
Dimensions and Tolerances for Proof Barrels
see Appendix CR 1.

Notes:
1) Check for safety reasons
4) Headspace on Rim
* Basic dimensions