C.I.P.	5,56 mm FX Country of Origin: CA	TAB. X Date 17-05-17 Revision

Alternative Names: Attention: Seulement pour l'utilisation de balles molles

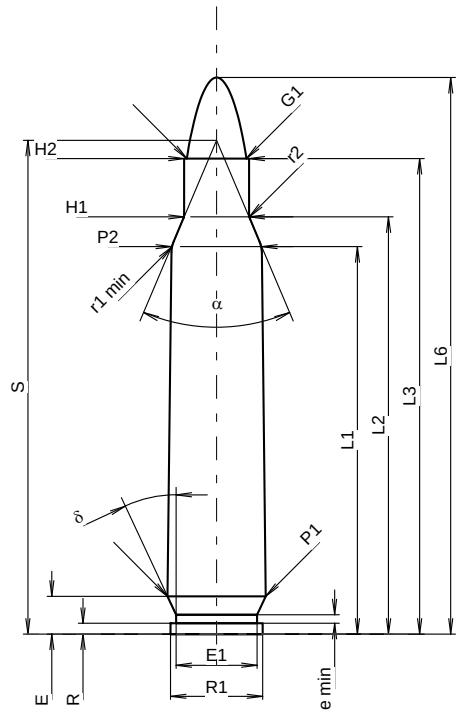

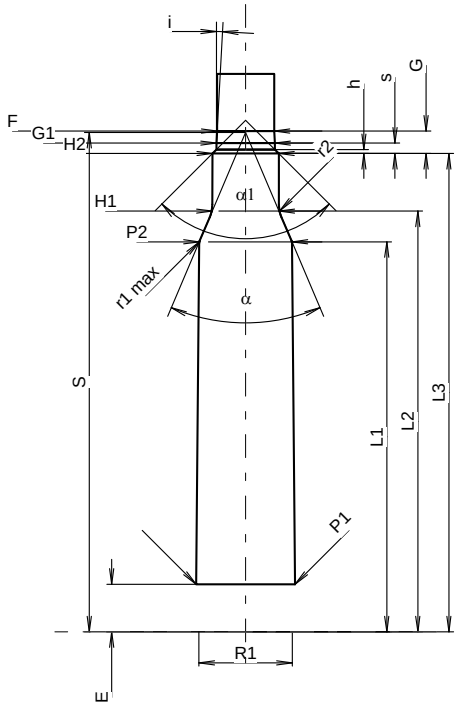

Scale 1.36:1

CARTRIDGE MAXI

Lengths

L1	=	37.67	-0.20
L2	=	40.56	-0.20
L3 1)	=	46.23	
L4	=		
L5	=		
L6	=	54.10	

Case Head

R	=	1.05
R1	=	8.97
R3	=	
E	=	3.68
E1	=	7.87
e min	=	0.83
δ	=	25°
f	=	
β	=	45°

Powder Chamber

P1	=	9.55	
P2 1)*	=	8.77	-0.20

Junction Cone

α *	=	46°
S *	=	48.00
r1 min	=	2.79
r2	=	1.27

Collar

H1 *	=	6.32
H2 1)	=	6.32

Projectile

G1 1)	=	5.79
G2	=	
F	=	
L3+G 1)	=	48.41

Pressures (Energies)
Method Transducer

Pmax	=	350	bar
PK	=	403	bar
PE	=	438	bar
M	=	10.00	

Miscellaneous Dimensions

Fe 1)3)	=	0.15
delta L	=	

CHAMBER MINI

Lengths

L1	=	37.91
L2	=	40.90
L3 1)	=	46.50

Breech

R	=	
R1	=	9.07
R2	=	
R3	=	
r	=	

Powder Chamber

E	=	4.62
P1 1)	=	9.61
P2 *	=	9.02

Junction Cone

α 1)*	=	46°
S *	=	48.54
r1 max	=	0.64
r2	=	3.18

Collar

H1 *	=	6.48
H2 1)	=	6.45

Commencement of Rifling

G1 1)*	=	5.69
G 1)	=	2.18
α1	=	90°
h	=	0.38
s *	=	1.01
i 1)*	=	3°10'36"
w	=	

Barrel

F 1)*	=	5.56
Z 1)	=	5.69

Grooves

b	=	1.88	
N	=	6	
u	=	305.00	
Q	=	25.03	mm²

Dimensions in << mm >>
Dimensions and Tolerances for Proof Barrels
see Appendix CR 1.

Notes:
1) Check for safety reasons
3) Headspace on Shoulder
* Basic dimensions