C.I.P.

9 mm MT-X

Country of Origin: SI

TAB.	X
Date	22-04-26
Revision	

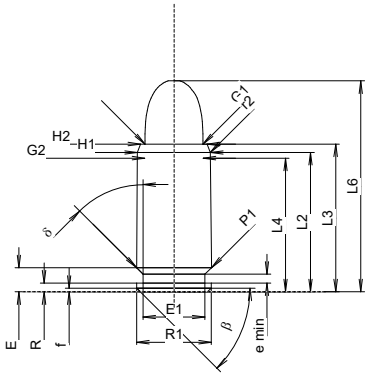

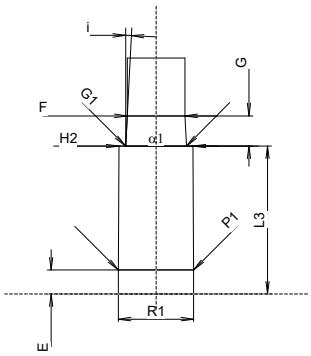

Scale 1:1

CARTRIDGE MAXI

Lengths

L1	=		
L2	=	18.45	
L3 1)	=	19.55	-0.20
L4	=	17.70	
L5	=		
L6	=	27.90	

Case Head

R	=	1.19	-0.15
R1	=	9.86	-0.16
R3	=		
E	=	3.20	
E1	=	8.20	-0.16
e min	=	1.15	
δ	=	45°	
f	=	0.50	
β	=	45°	

Powder Chamber

P1	=	9.92	-0.16
P2	=		

Junction Cone

α	=	
S	=	
r1 min	=	
r2	=	3.00

Collar

H1 *	=	9.65	-0.16
H2 1)	=	8.80	-0.16

Projectile

G1 1)	=	7.65
G2	=	7.75
F	=	
L3+G 1)	=	23.56

Pressures (Energies)

Energy

Emax	=	8.8	Joule
EK	=	9.4	Joule
EE	=	9.7	Joule

Miscellaneous Dimensions

Fe 1)6)	=	0.30
delta L	=	

CHAMBER MINI

Lengths

L1	=	
L2	=	
L3 1)	=	19.55

Breech

R	=	
R1	=	9.96
R2	=	
R3	=	
r	=	

Powder Chamber

E	=	3.18
P1 1)	=	9.94
P2	=	

Junction Cone

α	=	
S	=	
r1 max	=	
r2	=	

Collar

H1	=	
H2 1)	=	9.82

Commencement of Rifling

G1 1)*	=	8.05
G 1)	=	4.01
α1 *	=	180°
h	=	
s	=	
i 1)*	=	2°59'52"
w	=	

Barrel

F 1)*	=	7.63
Z 1)	=	7.83

Grooves

b	=	2.69	
N	=	6	
u	=	250.00	
Q	=	47.37	mm²

Dimensions in << mm >>
Dimensions and Tolerances for Proof Barrels
see Appendix CR 1.

Notes:
1) Check for safety reasons
6) Headspace on Case Mouth
* Basic dimensions