C.I.P.	224 Valkyrie Country of Origin: US	TAB.	I
		Date	19-05-22
		Revision	23-05-09

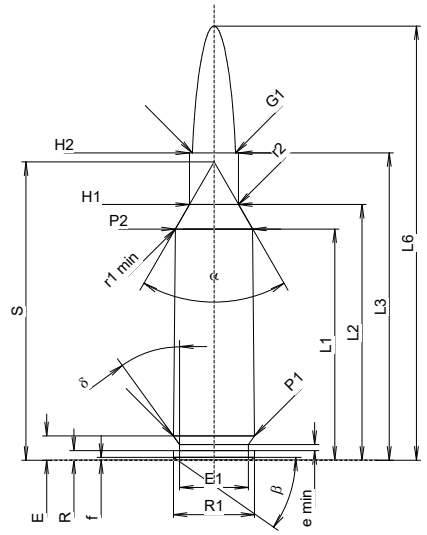

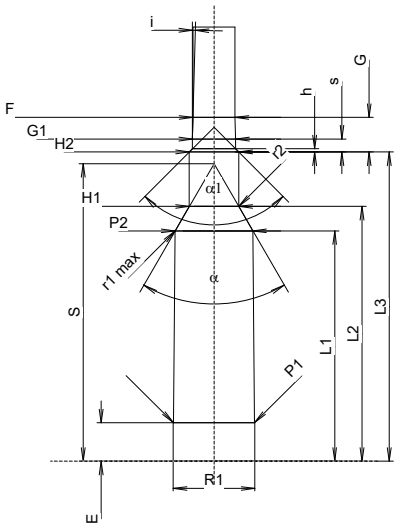

Scale 1:1

CARTRIDGE MAXI

Lengths

L1 1)	=	30.56	-0.20
L2 1)	=	33.80	-0.20
L3 1)	=	40.64	
L4	=		
L5	=		
L6	=	57.40	

Case Head

R	=	1.24
R1	=	10.72
R3	=	
E	=	3.20
E1	=	9.09
e min	=	0.84
δ	=	36°
f	=	0.38
β	=	35°

Powder Chamber

P1	=	10.72	
P2 1)*	=	10.24	-0.20

Junction Cone

α *	=	60°
S *	=	39.43
r1 min	=	0.76
r2	=	3.18

Collar

H1 *	=	6.50
H2 1)	=	6.50

Projectile

G1 1)	=	5.70
G2	=	
F	=	
L3+G 1)	=	45.20

Pressures (Energies)
Method Transducer

Pmax	=	3890	bar
PK	=	4474	bar
PE	=	4863	bar
M	=	25.00	
EE	=	1900	Joule

Miscellaneous Dimensions

Fe 1)3)	=	0.10
delta L	=	0.08

CHAMBER MINI

Lengths

L1	=	30.45
L2	=	33.68
L3 1)	=	40.89

Breech

R	=	
R1	=	10.81
R2	=	
R3	=	
r	=	

Powder Chamber

E	=	5.08
P1 1)	=	10.72
P2 *	=	10.28

Junction Cone

α 1)*	=	60°
S *	=	39.35
r1 max	=	0.64
r2	=	3.18

Collar

H1 *	=	6.55
H2 1)	=	6.55

Commencement of Rifling

G1 1)*	=	5.71
G 1)	=	4.56
α1	=	90°
h	=	0.42
s *	=	1.70
i 1)*	=	1°30'
w	=	

Barrel

F 1)*	=	5.56
Z 1)	=	5.69

Grooves

b	=	1.88	
N	=	6	
u	=	177.80	
Q	=	25.03	mm²

Dimensions in << mm >>
Dimensions and Tolerances for Proof Barrels
see Appendix CR1.

Notes:
1) Check for safety reasons
3) Headspace on Shoulder
* Basic dimensions