| C.I.P. | 284 Tony<br>Country of Origin: IT | TAB. I<br>Date 16-10-18<br>Revision |
|---|---|---|

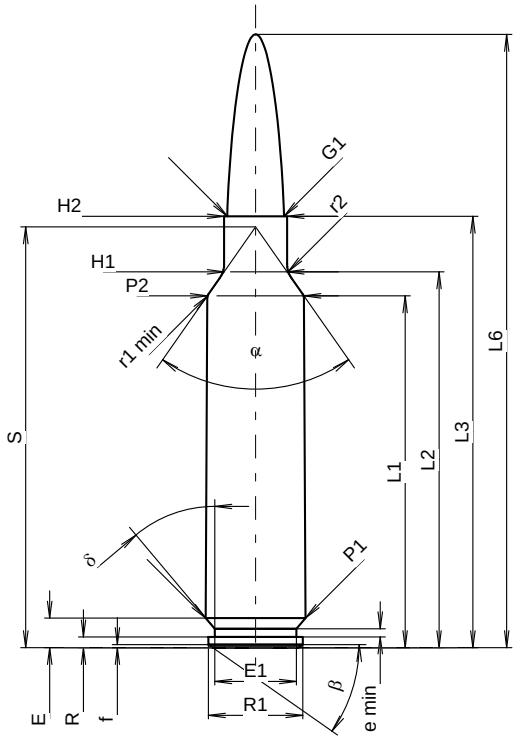


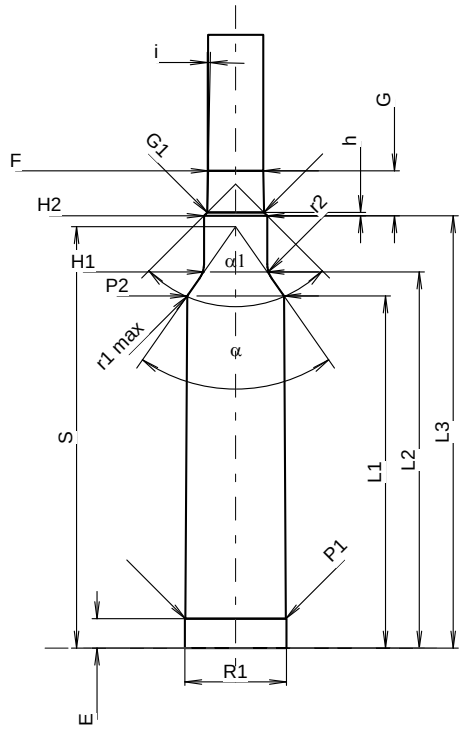


Scale 1.04:1

## CARTRIDGE MAXI

**Lengths**

| | | | |
|---|---|---|---|
| L1 1) | = | 44.74 | -0.20 |
| L2 1) | = | 47.80 | -0.20 |
| L3 1) | = | 54.87 | |
| L4 | = | | |
| L5 | = | | |
| L6 | = | 78.00 | |

**Case Head**

| | | |
|---|---|---|
| R | = | 1.37 |
| R1 | = | 12.01 |
| R3 | = | |
| E | = | 3.76 |
| E1 | = | 10.39 |
| e min | = | 1.02 |
| δ | = | 40° |
| f | = | 0.38 |
| β | = | 35° |

**Powder Chamber**

| | | | |
|---|---|---|---|
| P1 | = | 12.69 | |
| P2 1)* | = | 12.29 | -0.20 |

**Junction Cone**

| | | |
|---|---|---|
| α * | = | 70° |
| S * | = | 53.51 |
| r1 min | = | 0.76 |
| r2 | = | 3.17 |

**Collar**

| | | |
|---|---|---|
| H1 * | = | 8.00 |
| H2 1) | = | 8.00 |

**Projectile**

| | | |
|---|---|---|
| G1 1) | = | 7.21 |
| G2 | = | |
| F | = | |
| L3+G 1) | = | 60.58 |

**Pressures (Energies)**
**Method Transducer**

| | | | |
|---|---|---|---|
| Pmax | = | 4400 | bar |
| PK | = | 5060 | bar |
| PE | = | 5500 | bar |
| M | = | 25.00 | |
| EE | = | 4300 | Joule |

**Miscellaneous Dimensions**

| | | |
|---|---|---|
| Fe 1)3) | = | 0.10 |
| delta L | = | |

## CHAMBER MINI

**Lengths**

| | | |
|---|---|---|
| L1 | = | 44.79 |
| L2 | = | 47.84 |
| L3 1) | = | 54.99 |

**Breech**

| | | |
|---|---|---|
| R | = | |
| R1 | = | 12.92 |
| R2 | = | |
| R3 | = | |
| r | = | |

**Powder Chamber**

| | | |
|---|---|---|
| E | = | 3.76 |
| P1 1) | = | 12.77 |
| P2 * | = | 12.32 |

**Junction Cone**

| | | |
|---|---|---|
| α 1)* | = | 70° |
| S * | = | 53.59 |
| r1 max | = | 0.76 |
| r2 | = | 3.17 |

**Collar**

| | | |
|---|---|---|
| H1 * | = | 8.05 |
| H2 1) | = | 8.05 |

**Commencement of Rifling**

| | | |
|---|---|---|
| G1 1)* | = | 7.23 |
| G 1) | = | 5.71 |
| α1 | = | 90° |
| h * | = | 0.41 |
| s | = | |
| i 1)* | = | 1°11'20" |
| w | = | |

**Barrel**

| | | |
|---|---|---|
| F 1)* | = | 7.01 |
| Z 1) | = | 7.21 |

**Grooves**

| | | | |
|---|---|---|---|
| b | = | 2.79 | |
| N | = | 4 | |
| u | = | 228.00 | |
| Q | = | 39.74 | mm² |

Dimensions in << mm >>
Dimensions and Tolerances for Proof Barrels
see Appendix CR1.

Notes:
1) Check for safety reasons
3) Headspace on Shoulder
* Basic dimensions