C.I.P.	300 Pegasus Country of Origin: US	TAB. I Date 14-05-20 Revision

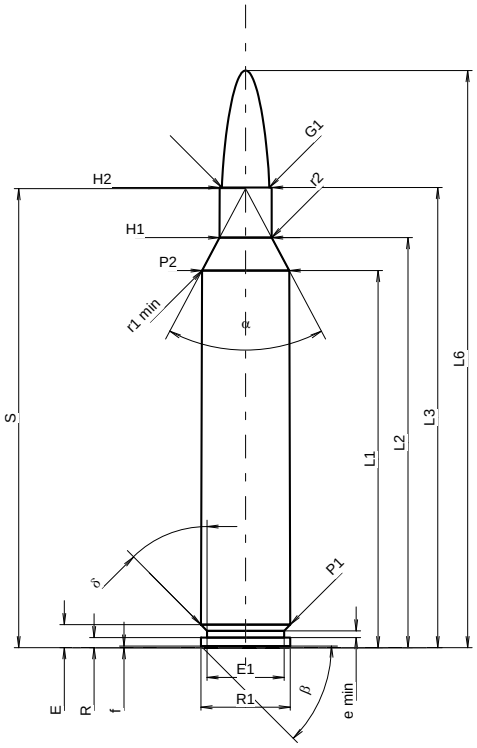

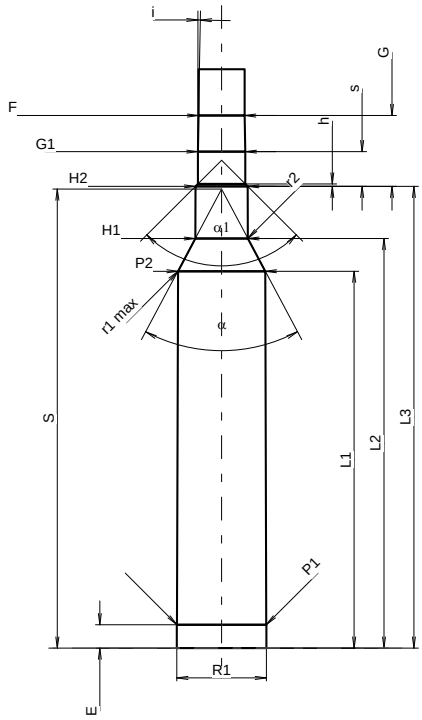

Scale 1:1.25

CARTRIDGE MAXI

Lengths

L1 1)	=	62.23	-0.20
L2 1)	=	67.66	-0.20
L3 1)	=	75.95	
L4	=		
L5	=		
L6	=	95.25	

Case Head

R	=	1.65
R1	=	14.73
R3	=	
E	=	3.79
E1	=	12.70
e min	=	1.12
δ	=	45°
f	=	0.25
β	=	45°

Powder Chamber

P1	=	14.73	
P2 1)*	=	14.38	-0.20

Junction Cone

α *	=	56°
S *	=	75.75
r1 min	=	1.02
r2	=	3.18

Collar

H1 *	=	8.61
H2 1)	=	8.59

Projectile

G1 1)*	=	7.82
G2	=	
F	=	
L3+G 1)	=	87.65

Pressures (Energies)
Method Transducer

Pmax	=	4300	bar
PK	=	4945	bar
PE	=	5375	bar
M	=	25.00	
EE	=	6400	Joule

Miscellaneous Dimensions

Fe 1)3)	=	0.10
delta L	=	

CHAMBER MINI

Lengths

L1	=	62.20
L2	=	67.61
L3 1)	=	76.20

Breech

R	=	
R1	=	14.78
R2	=	
R3	=	
r	=	

Powder Chamber

E	=	3.85
P1 1)	=	14.76
P2 *	=	14.41

Junction Cone

α 1)*	=	56°
S *	=	75.75
r1 max	=	0.76
r2	=	3.81

Collar

H1 *	=	8.66
H2 1)	=	8.64

Commencement of Rifling

G1 1)*	=	7.85
G 1)	=	11.70
α1	=	90°
h	=	0.40
s *	=	5.72
i 1)*	=	1°06'
w	=	

Barrel

F 1)*	=	7.62
Z 1)	=	7.82

Grooves

b	=	3.00	
N	=	6	
u	=	254.00	
Q	=	47.45	mm²

Dimensions in << mm >>
Dimensions and Tolerances for Proof Barrels
see Appendix CR1.

Notes:
1) Check for safety reasons
3) Headspace on Shoulder
* Basic dimensions