C.I.P.	308 Match Country of Origin: IT	TAB. I Date 14-05-20 Revision

Alternative Names: 308 GAC

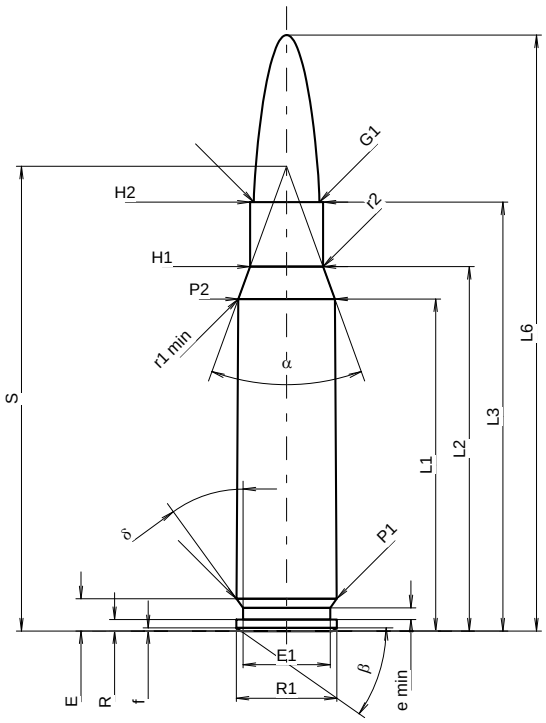

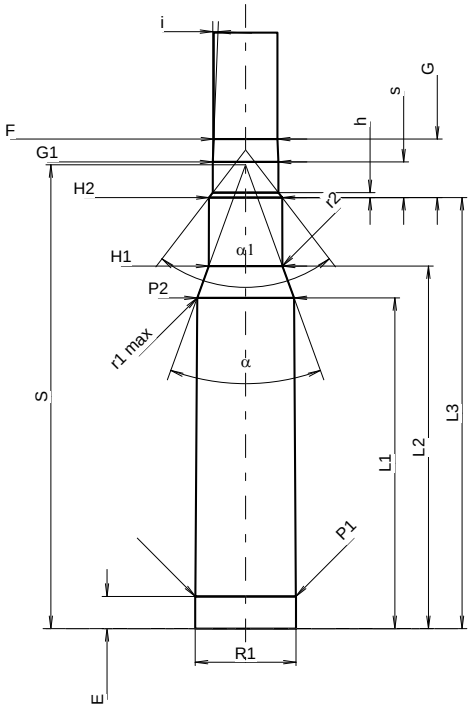

Scale 1.11:1

CARTRIDGE MAXI

Lengths

L1 1)	=	39.62	-0.20
L2 1)	=	43.48	-0.20
L3 1)	=	51.18	
L4	=		
L5	=		
L6	=	71.12	

Case Head

R	=	1.37
R1	=	12.01
R3	=	
E	=	3.85
E1	=	10.39
e min	=	1.40
δ	=	36°
f	=	0.38
β	=	35°

Powder Chamber

P1	=	11.96	
P2 1)*	=	11.53	-0.20

Junction Cone

α *	=	40°
S *	=	55.46
r1 min	=	0.76
r2	=	3.18

Collar

H1 *	=	8.72
H2 1)	=	8.72

Projectile

G1 1)	=	7.84
G2	=	
F	=	
L3+G 1)	=	58.16

Pressures (Energies)
Method Transducer

Pmax	=	4150	bar
PK	=	4773	bar
PE	=	5188	bar
M	=	25.00	
EE	=	3600	Joule

Miscellaneous Dimensions

Fe 1)3)	=	0.10
delta L	=	0.10

CHAMBER MINI

Lengths

L1	=	39.48
L2	=	43.28
L3 1)	=	51.44

Breech

R	=	
R1	=	12.03
R2	=	
R3	=	
r	=	

Powder Chamber

E	=	3.85
P1 1)	=	11.99
P2 *	=	11.56

Junction Cone

α 1)*	=	40°
S *	=	55.35
r1 max	=	0.76
r2	=	3.68

Collar

H1 *	=	8.79
H2 1)	=	8.74

Commencement of Rifling

G1 1)*	=	7.84
G 1)	=	6.98
α1	=	75°
h	=	0.59
s *	=	4.26
i 1)*	=	2°18'57"
w	=	

Barrel

F 1)*	=	7.62
Z 1)	=	7.82

Grooves

b	=	4.47	
N	=	4	
u	=	305.00	
Q	=	47.51	mm²

Dimensions in << mm >>
Dimensions and Tolerances for Proof Barrels
see Appendix CR 1.

Notes:
1) Check for safety reasons
3) Headspace on Shoulder
* Basic dimensions