C.I.P.	35 Rem.	TAB.	I
		Date	91-02-20
	Country of Origin: US	Revision	02-05-15

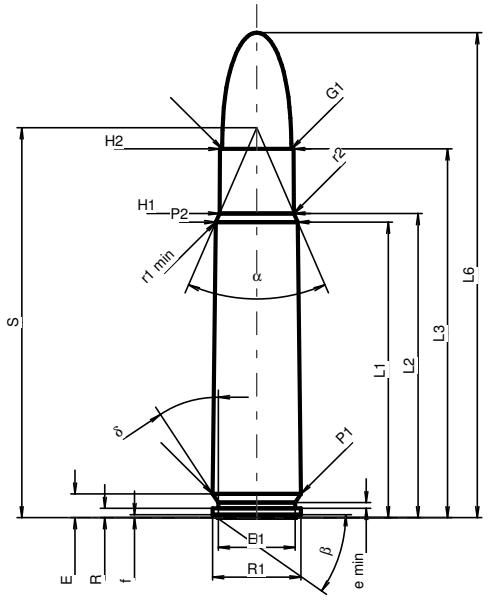

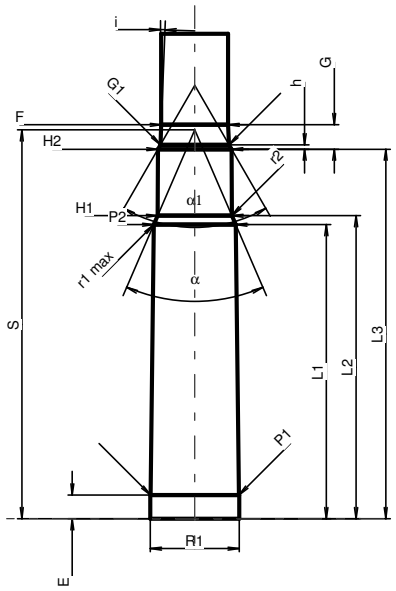

Scale 1:1

CARTRIDGE MAXI

Lengths

L1 1)	=	39.10	-0.20
L2 1)	=	40.24	-0.20
L3 1)	=	48.77	
L4	=		
L5	=		
L6	=	64.14	

Case Head

R	=	1.24
R1	=	11.68
R3	=	
E	=	3.14
E1	=	10.16
e min	=	0.76
δ	=	34°
f	=	0.41
β	=	35°

Powder Chamber

P1	=	11.66	
P2 1)*	=	10.82	-0.20

Junction Cone

α *	=	46°49'59"
S *	=	51.59
r1 min	=	0.64
r2	=	1.27

Collar

H1 *	=	9.83
H2 1)	=	9.75

Projectile

G1 1)	=	9.12
G2	=	
F	=	
L3+G 1)	=	52.02

Pressures (Energies)
Method Transducer

Pmax	=	2750	bar
PK	=	3163	bar
PE	=	3575	bar
M	=	25.00	
EE	=	2655	Joule

Miscellaneous Dimensions

Fe 1)3)	=	0.15
delta L	=	0.13

CHAMBER MINI

Lengths

L1	=	38.91
L2	=	40.10
L3 1)	=	48.88

Breech

R	=	
R1	=	11.78
R2	=	
R3	=	
r	=	

Powder Chamber

E	=	3.14
P1 1)	=	11.70
P2 *	=	10.86

Junction Cone

α 1)*	=	46°50'
S *	=	51.45
r1 max	=	0.64
r2	=	1.27

Collar

H1 *	=	9.83
H2 1)	=	9.75

Commencement of Rifling

G1 1)*	=	9.07
G 1)	=	3.25
α1 *	=	60°
h	=	0.59
s	=	
i 1)*	=	2°15'32"
w	=	

Barrel

F 1)*	=	8.86
Z 1)	=	9.07

Grooves

b	=	2.92	
N	=	7	
u	=	406.00	
Q	=	63.84	mm²

Dimensions in << mm >>
Dimensions and Tolerances for Proof Barrels
see Appendix CR 1.

Notes:
1) Check for safety reasons
3) Headspace on Shoulder
* Basic dimensions