C.I.P.	375 SWISS P Country of Origin: CH	TAB. I Date 18-05-16 Revision

Alternative Names: 9.5 x 70 mm

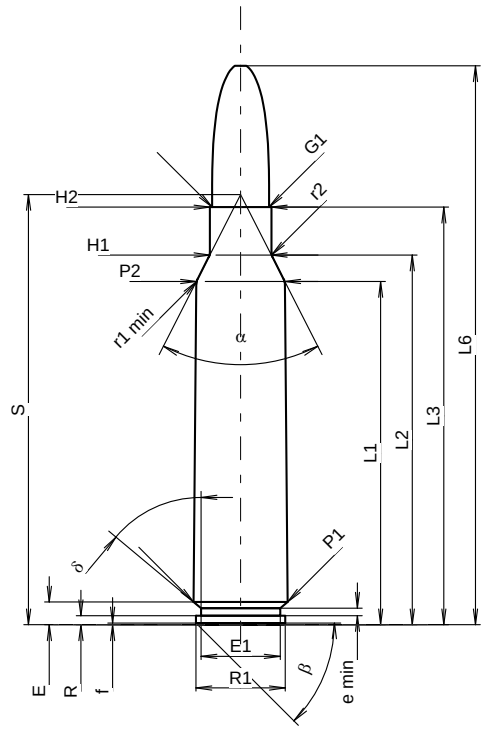

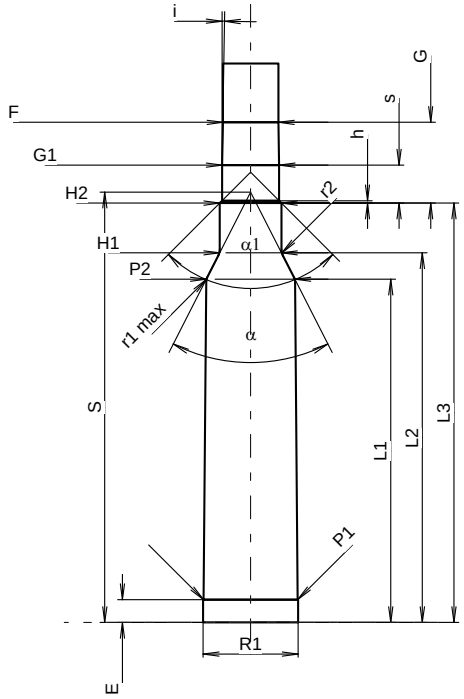

Scale 1:1.26

CARTRIDGE MAXI

Lengths

L1 1)	=	57.43	-0.20
L2 1)	=	61.85	-0.20
L3 1)	=	69.85	
L4	=		
L5	=		
L6	=	93.50	

Case Head

R	=	1.52
R1	=	14.93
R3	=	
E	=	3.81
E1	=	13.24
e min	=	1.25
δ	=	50°
f	=	0.30
β	=	45°

Powder Chamber

P1	=	15.73	
P2 1)*	=	14.80	-0.20

Junction Cone

α *	=	54°
S *	=	71.96
r1 min	=	2.00
r2	=	2.00

Collar

H1 *	=	10.30
H2 1)	=	10.30

Projectile

G1 1)	=	9.55
G2	=	
F	=	
L3+G 1)	=	83.36

Pressures (Energies)
Method Transducer

Pmax	=	4200	bar
PK	=	4830	bar
PE	=	5250	bar
M	=	25.00	
EE	=	7500	Joule

Miscellaneous Dimensions

Fe 1)3)	=	0.10
delta L	=	

CHAMBER MINI

Lengths

L1	=	57.41
L2	=	61.82
L3 1)	=	70.15

Breech

R	=	
R1	=	15.86
R2	=	
R3	=	
r	=	

Powder Chamber

E	=	3.81
P1 1)	=	15.76
P2 *	=	14.83

Junction Cone

α 1)*	=	54°
S *	=	71.97
r1 max	=	1.50
r2	=	2.50

Collar

H1 *	=	10.34
H2 1)	=	10.33

Commencement of Rifling

G1 1)*	=	9.55
G 1)	=	13.51
α1	=	90°
h	=	0.39
s *	=	6.35
i 1)*	=	1°
w	=	

Barrel

F 1)*	=	9.30
Z 1)	=	9.55

Grooves

b	=	4.49	
N	=	4	
u	=	304.80	
Q	=	70.27	mm²

Dimensions in << mm >>
Dimensions and Tolerances for Proof Barrels
see Appendix CR 1.

Notes:
1) Check for safety reasons
3) Headspace on Shoulder
* Basic dimensions