C.I.P.	4,6 x 30 Country of Origin: DE	TAB.	I
		Date	04-05-18
		Revision	25-05-13

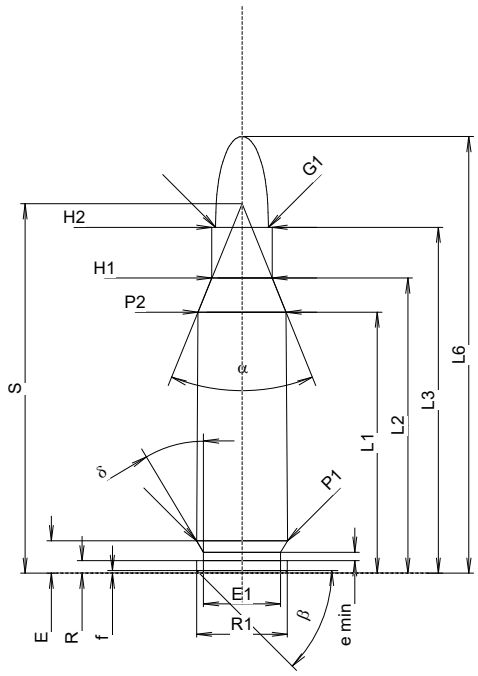

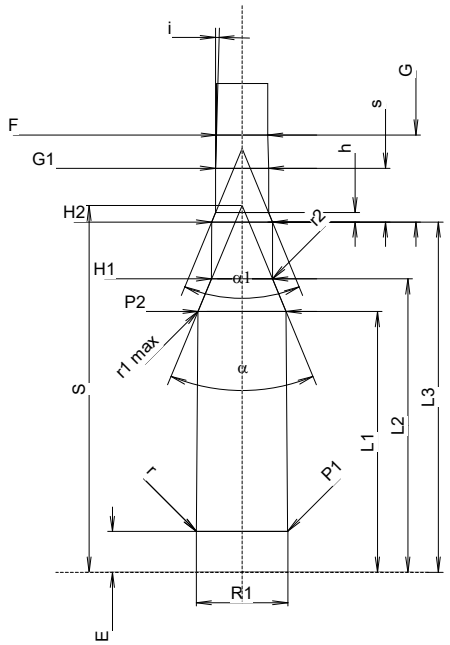

Scale 1.5:1

CARTRIDGE MAXI

Lengths

L1 1)*	=	23.02	-0.20
L2 1)*	=	26.03	-0.20
L3 1)	=	30.50	
L4	=		
L5	=		
L6	=	38.50	

Case Head

R	=	1.10
R1	=	8.00
R3	=	
E	=	2.87
E1	=	6.80
e min	=	0.75
δ	=	31°
f	=	0.25
β	=	45°

Powder Chamber

P1	=	8.02	
P2 1)*	=	7.75	-0.20

Junction Cone

α	=	44°07'37"
S	=	32.58
r1 min	=	
r2	=	

Collar

H1 *	=	5.31
H2 1)	=	5.31

Projectile

G1 1)	=	4.65
G2	=	
F	=	
L3+G 1)	=	38.17

Pressures (Energies)
Method Transducer

Pmax	=	4000	bar
PK	=	4600	bar
PE	=	5200	bar
M	=	17.50	

Miscellaneous Dimensions

Fe 1)3)	=	0.20
delta L	=	

CHAMBER MINI

Lengths

L1 *	=	22.99
L2 *	=	25.86
L3 1)	=	30.88

Breech

R	=	3.20
R1	=	8.07
R2	=	3.00
R3	=	
r	=	0.40

Powder Chamber

E	=	3.60
P1 1)	=	8.03
P2 *	=	7.76

Junction Cone

α 1)	=	45°
S	=	32.34
r1 max	=	1.60
r2	=	2.30

Collar

H1 *	=	5.38
H2 1)	=	5.36

Commencement of Rifling

G1 1)*	=	4.68
G 1)*	=	7.67
α1	=	45°
h	=	0.82
s *	=	4.74
i 1)	=	1°22'7"
w	=	

Barrel

F 1)*	=	4.52
Z 1)	=	4.62

Grooves

b	=	1.21	
N	=	6	
u	=	160.00	
Q	=	16.52	mm²

Dimensions in << mm >>
Dimensions and Tolerances for Proof Barrels
see Appendix CR-1.

Notes:
1) Check for safety reasons
3) Headspace on Shoulder
* Basic dimensions

Reproduction forbidden as well as in the form of extracts without approval of C.I.P.