C.I.P.

45 Blaser

Country of Origin: DE

TAB.	I
Date	02-10-21
Revision	22-04-26

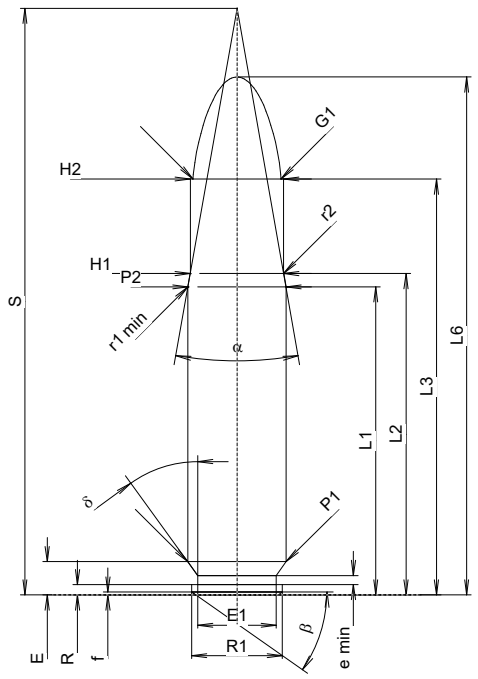

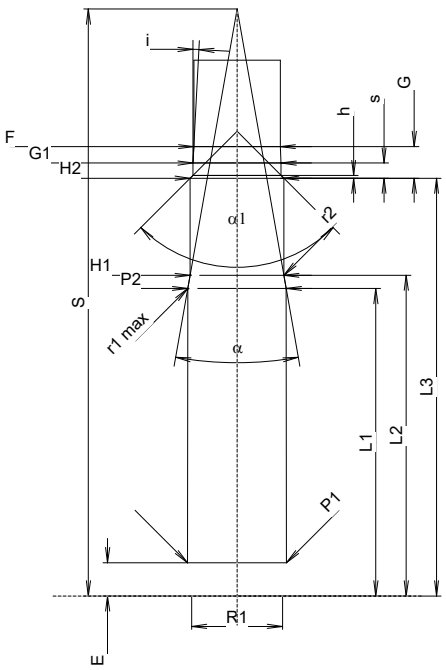

Scale 1:1

CARTRIDGE MAXI

Lengths

L1 1)*	=	40.74	-0.20
L2 1)*	=	42.50	-0.20
L3 1)	=	55.00	
L4	=		
L5	=		
L6	=	68.50	

Case Head

R	=	1.37
R1	=	12.01
R3	=	
E	=	4.39
E1	=	10.39
e min	=	1.20
δ	=	36°
f	=	0.38
β	=	35°

Powder Chamber

P1	=	13.03	
P2 1)*	=	12.98	-0.20

Junction Cone

α	=	19°58'44"
S	=	77.59
r1 min	=	0.50
r2	=	0.50

Collar

H1 *	=	12.36
H2 1)	=	12.36

Projectile

G1 1)	=	11.64
G2	=	
F	=	
L3+G 1)	=	59.19

Pressures (Energies)
Method Transducer

Pmax	=	3700	bar
PK	=	4255	bar
PE	=	4625	bar
M	=	25.00	
EE	=	4650	Joule

Miscellaneous Dimensions

Fe	=	0.15
delta L	=	

CHAMBER MINI

Lengths

L1 *	=	40.66
L2 *	=	42.42
L3 1)	=	55.25

Breech

R	=	
R1	=	12.03
R2	=	
R3	=	
r	=	

Powder Chamber

E	=	4.41
P1 1)	=	13.08
P2 *	=	13.02

Junction Cone

α 1)	=	19°58'44"
S	=	77.62
r1 max	=	0.50
r2	=	0.50

Collar

H1 *	=	12.40
H2 1)	=	12.38

Commencement of Rifling

G1 1)*	=	11.66
G 1)*	=	4.19
α1	=	90°
h	=	0.36
s *	=	2.00
i 1)	=	3°00'20"
w	=	

Barrel

F 1)*	=	11.43
Z 1)	=	11.63

Grooves

b	=	3.81	
N	=	6	
u	=	356.00	
Q	=	104.94	mm²

Dimensions in << mm >>
Dimensions and Tolerances for Proof Barrels
see Appendix CR 1.

Notes: 1) Check for safety reasons
* Basic dimensions