C.I.P.	450 Rigby Country of Origin: GB	TAB.	I
		Date	00-02-15
		Revision	07-05-14

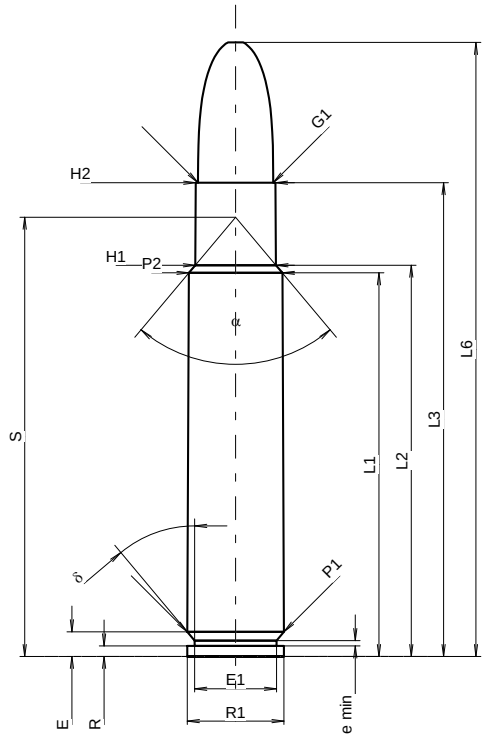

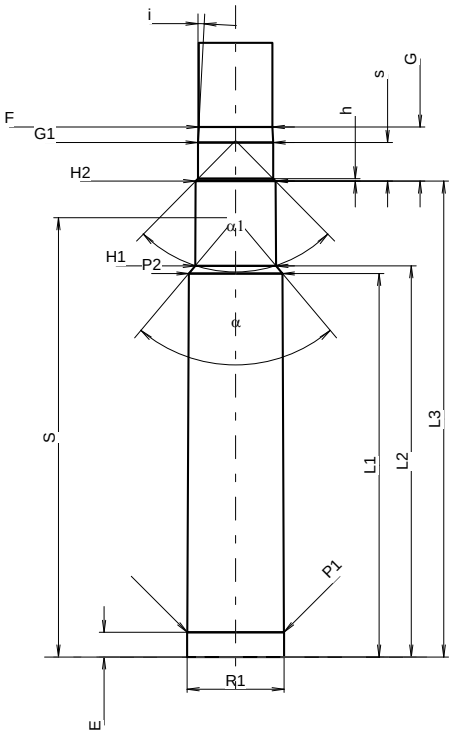

Scale 1:1.17

CARTRIDGE MAXI

Lengths

L1 *	=	59.50	-0.20
L2 *	=	60.69	-0.20
L3 1)	=	73.50	
L4	=		
L5	=		
L6	=	95.25	

Case Head

R	=	1.65
R1	=	14.99
R3	=	
E	=	3.81
E1	=	12.70
e min	=	0.81
δ	=	39°55'50"
f	=	
β	=	

Powder Chamber

P1	=	14.96	
P2 1)*	=	14.50	-0.20

Junction Cone

α	=	80°04'59"
S	=	68.13
r1 min	=	
r2	=	

Collar

H1 *	=	12.50
H2 1)	=	12.38

Projectile

G1 1)	=	11.66
G2	=	
F	=	
L3+G 1)	=	81.89

Pressures (Energies)
Method Transducer

Pmax	=	4000	bar
PK	=	4600	bar
PE	=	5000	bar
M	=	25.00	
EE	=	8715	Joule

Miscellaneous Dimensions

Fe 1)3)	=	0.10
delta L	=	

CHAMBER MINI

Lengths

L1 *	=	59.48
L2 *	=	60.67
L3 1)	=	73.80

Breech

R	=	1.65
R1	=	15.04
R2	=	
R3	=	
r	=	

Powder Chamber

E	=	3.81
P1 1)	=	14.99
P2 *	=	14.53

Junction Cone

α 1)	=	80°04'59"
S	=	68.13
r1 max	=	
r2	=	

Collar

H1 *	=	12.53
H2 1)	=	12.41

Commencement of Rifling

G1 1)*	=	11.68
G 1)*	=	8.39
α1	=	89°13'14"
h	=	0.37
s *	=	6.00
i 1)	=	2°59'38"
w	=	

Barrel

F 1)*	=	11.43
Z 1)	=	11.63

Grooves

b	=	3.60	
N	=	6	
u	=	420.00	
Q	=	104.80	mm²

Dimensions in << mm >>
Dimensions and Tolerances for Proof Barrels
see Appendix CR 1.

Notes:
1) Check for safety reasons
3) Headspace on Shoulder
* Basic dimensions