C.I.P.	6,5 PRC Country of Origin: US	TAB. I Date 18-10-17 Revision

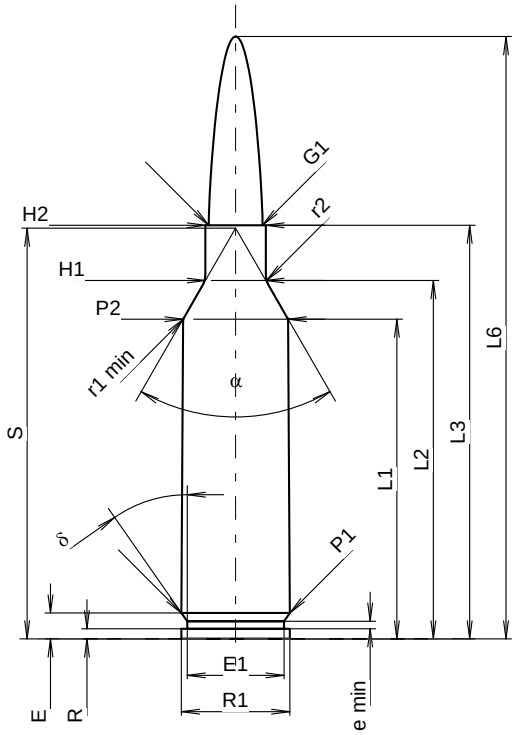

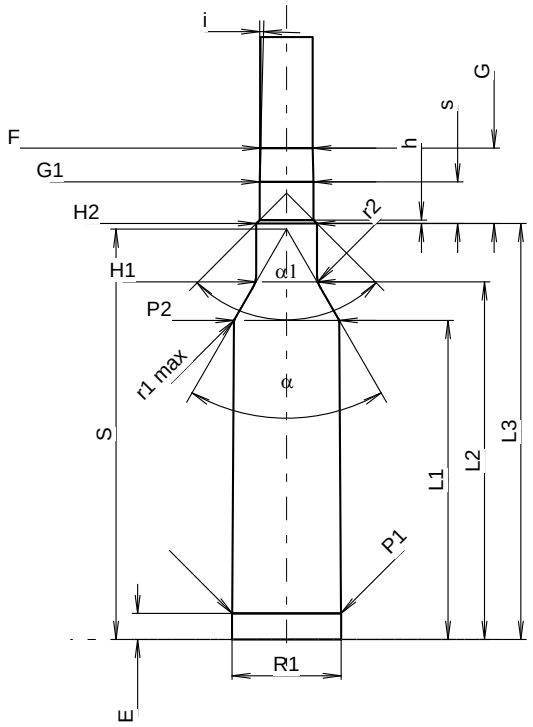

Scale 1.06:1

CARTRIDGE MAXI

Lengths

L1 1)	=	39.84	-0.20
L2 1)	=	44.65	-0.20
L3 1)	=	51.56	
L4	=		
L5	=		
L6	=	75.06	

Case Head

R	=	1.27
R1	=	13.51
R3	=	
E	=	3.24
E1	=	12.07
e min	=	0.94
δ	=	35°
f	=	
β	=	35°

Powder Chamber

P1	=	13.51	
P2 1)*	=	13.10	-0.20

Junction Cone

α *	=	60°
S *	=	51.18
r1 min	=	0.76
r2	=	3.18

Collar

H1 *	=	7.54
H2 1)	=	7.54

Projectile

G1 1)	=	6.72
G2	=	
F	=	
L3+G 1)	=	60.96

Pressures (Energies)
Method Transducer

Pmax	=	4400	bar
PK	=	5060	bar
PE	=	5500	bar
M	=	25.00	
EE	=	4000	Joule

Miscellaneous Dimensions

Fe 1)3)	=	0.10
delta L	=	0.06

CHAMBER MINI

Lengths

L1	=	39.75
L2	=	44.55
L3 1)	=	51.82

Breech

R	=	
R1	=	13.60
R2	=	
R3	=	
r	=	

Powder Chamber

E	=	3.24
P1 1)	=	13.55
P2 *	=	13.13

Junction Cone

α 1)*	=	60°
S *	=	51.12
r1 max	=	0.76
r2	=	3.18

Collar

H1 *	=	7.59
H2 1)	=	7.57

Commencement of Rifling

G1 1)*	=	6.72
G 1)	=	9.40
α1	=	90°
h	=	0.43
s *	=	5.20
i 1)*	=	1°30'
w	=	

Barrel

F 1)*	=	6.50
Z 1)	=	6.71

Grooves

b	=	2.27	
N	=	6	
u	=	203.00	
Q	=	34.64	mm²

Dimensions in << mm >>
Dimensions and Tolerances for Proof Barrels
see Appendix CR1.

Notes:
1) Check for safety reasons
3) Headspace on Shoulder
* Basic dimensions

Reproduction forbidden as well as in the form of extracts without approval of C.I.P.