C.I.P.	6 mm Advanced Rifle Cartridge Country of Origin: US	TAB. I Date 20-11-10 Revision

Alternative Names: 6 mm ARC

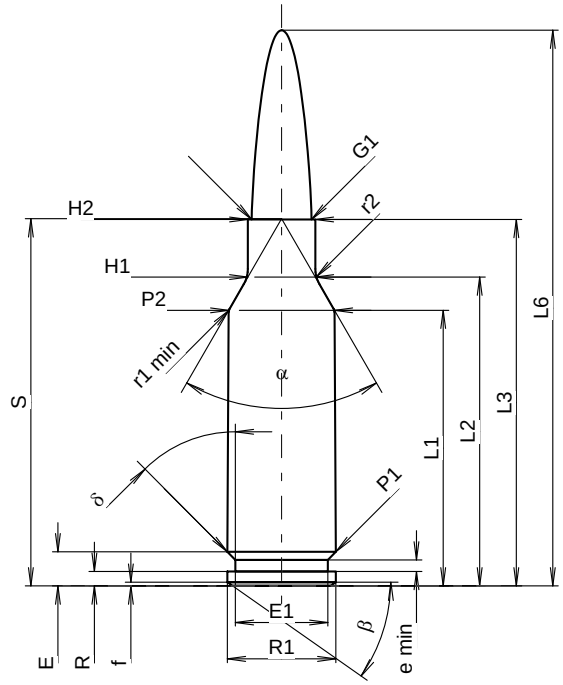

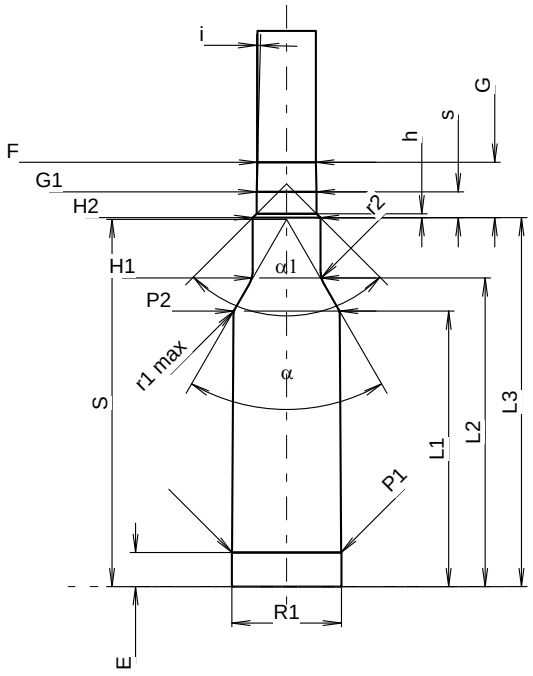

Scale 1.28:1

CARTRIDGE MAXI

Lengths

L1 1)	=	28.47	-0.20
L2 1)	=	31.90	-0.20
L3 1)	=	37.85	
L4	=		
L5	=		
L6	=	57.40	

Case Head

R	=	1.50
R1	=	11.20
R3	=	
E	=	3.52
E1	=	9.55
e min	=	1.19
δ	=	45°
f	=	0.38
β	=	35°

Powder Chamber

P1	=	11.20	
P2 1)*	=	10.92	-0.20

Junction Cone

α *	=	60°
S *	=	37.93
r1 min	=	0.76
r2	=	3.18

Collar

H1 *	=	6.96
H2 1)	=	6.96

Projectile

G1 1)	=	6.18
G2	=	
F	=	
L3+G 1)	=	43.59

Pressures (Energies)
Method Transducer

Pmax	=	4300	bar
PK	=	4945	bar
PE	=	5375	bar
M	=	17.50	
EE	=	3000	Joule

Miscellaneous Dimensions

Fe 1)3)	=	0.10
delta L	=	

CHAMBER MINI

Lengths

L1	=	28.45
L2	=	31.88
L3 1)	=	38.10

Breech

R	=	
R1	=	11.31
R2	=	
R3	=	
r	=	

Powder Chamber

E	=	3.52
P1 1)	=	11.26
P2 *	=	10.95

Junction Cone

α 1)	=	60°
S *	=	37.93
r1 max	=	0.76
r2	=	3.18

Collar

H1 *	=	6.99
H2 1)	=	6.99

Commencement of Rifling

G1 1)*	=	6.18
G 1)	=	5.74
α1 *	=	90°
h	=	0.41
s	=	2.68
i 1)*	=	1°30'
w	=	

Barrel

F 1)*	=	6.02
Z 1)	=	6.17

Grooves

b	=	2.29	
N	=	6	
u	=	191.00	
Q	=	29.52	mm²

Dimensions in << mm >>
Dimensions and Tolerances for Proof Barrels
see Appendix CR 1.

Notes:
1) Check for safety reasons
3) Headspace on Shoulder
* Basic dimensions