C.I.P.	6 x 47 ATZL Country of Origin: AT	TAB.	I
		Date	97-11-05
		Revision	11-05-25

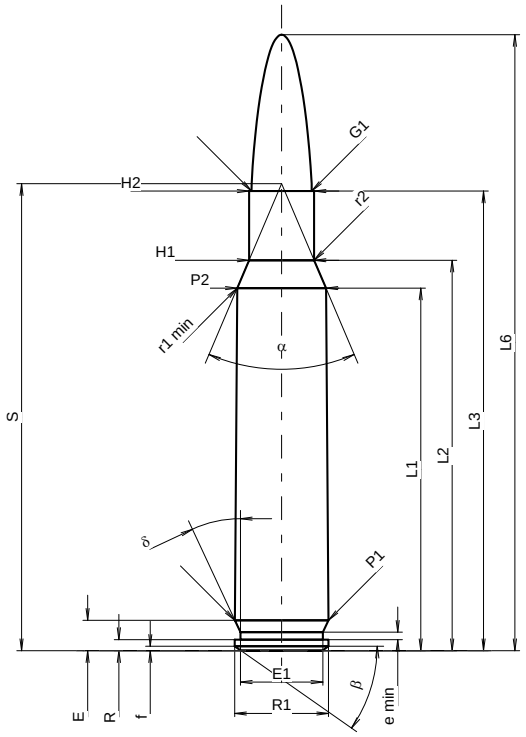

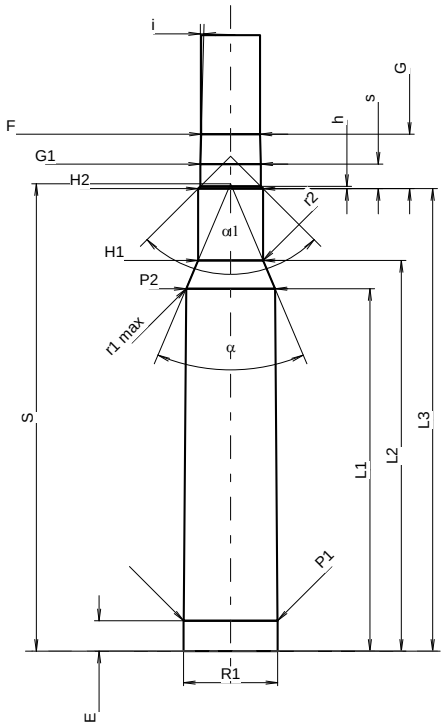

Scale 1.29:1

CARTRIDGE MAXI

Lengths

L1 1)*	=	37.08	-0.20
L2 1)*	=	39.93	-0.20
L3 1)	=	47.00	
L4	=		
L5	=		
L6	=	63.00	

Case Head

R	=	1.14
R1	=	9.60
R3	=	
E	=	3.11
E1	=	8.43
e min	=	0.76
δ	=	25°
f	=	0.45
β	=	35°

Powder Chamber

P1	=	9.56	
P2 1)*	=	9.07	-0.20

Junction Cone

α *	=	46°00'30"
S *	=	47.76
r1 min	=	0.64
r2	=	2.54

Collar

H1 *	=	6.65
H2 1)	=	6.65

Projectile

G1 1)	=	6.17
G2	=	
F	=	
L3+G 1)	=	52.57

Pressures (Energies)
Method Transducer

Pmax	=	4050	bar
PK	=	4660	bar
PE	=	5060	bar
M	=	25.00	
EE	=	2100	Joule

Miscellaneous Dimensions

Fe 1)3)	=	0.10
delta L	=	

CHAMBER MINI

Lengths

L1 *	=	37.07
L2 *	=	39.95
L3 1)	=	47.30

Breech

R	=	
R1	=	9.63
R2	=	
R3	=	
r	=	

Powder Chamber

E	=	3.11
P1 1)	=	9.59
P2 *	=	9.09

Junction Cone

α 1)	=	45°54'58"
S	=	47.80
r1 max	=	0.64
r2	=	3.18

Collar

H1 *	=	6.65
H2 1)	=	6.65

Commencement of Rifling

G1 1)*	=	6.18
G 1)*	=	5.57
α1	=	90°
h	=	0.24
s *	=	2.52
i 1)	=	1°30'9"
w	=	

Barrel

F 1)*	=	6.02
Z 1)	=	6.17

Grooves

b	=	2.29	
N	=	6	
u	=	356.00	
Q	=	29.52	mm²

Dimensions in << mm >>
Dimensions and Tolerances for Proof Barrels
see Appendix CR 1.

Notes:
1) Check for safety reasons
3) Headspace on Shoulder
* Basic dimensions

Reproduction forbidden as well as in the form of extracts without approval of C.I.P.