C.I.P.	8,5 x 55 Blaser Country of Origin: SE	TAB. I Date 19-05-22 Revision

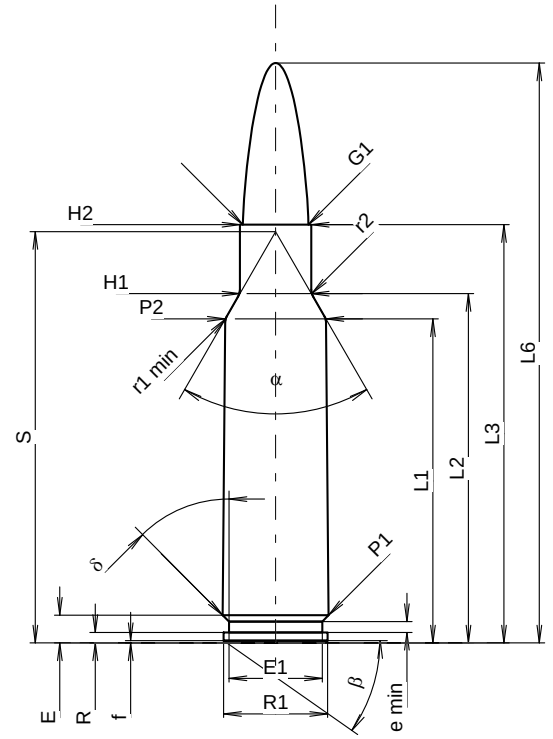

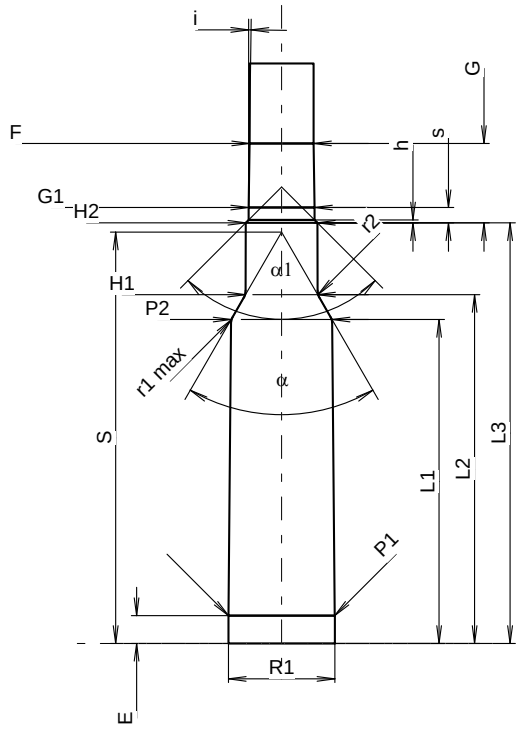

Scale 1.01:1

CARTRIDGE MAXI

Lengths

L1 1)	=	42.38	-0.20
L2 1)	=	45.68	-0.20
L3 1)	=	54.70	
L4	=		
L5	=		
L6	=	75.84	

Case Head

R	=	1.37
R1	=	13.59
R3	=	
E	=	3.62
E1	=	12.19
e min	=	1.42
δ	=	45°
f	=	0.30
β	=	35°

Powder Chamber

P1	=	13.84	
P2 1)*	=	13.17	-0.20

Junction Cone

α *	=	60°
S *	=	53.79
r1 min	=	1.50
r2	=	2.00

Collar

H1 *	=	9.36
H2 1)	=	9.36

Projectile

G1 1)	=	8.59
G2	=	
F	=	
L3+G 1)	=	65.10

Pressures (Energies)
Method Transducer

Pmax	=	4300	bar
PK	=	4945	bar
PE	=	5375	bar
M	=	25.00	
EE	=	4500	Joule

Miscellaneous Dimensions

Fe 1)3)	=	0.10
delta L	=	

CHAMBER MINI

Lengths

L1	=	42.35
L2	=	45.62
L3 1)	=	55.00

Breech

R	=	1.37
R1	=	13.92
R2	=	
R3	=	
r	=	

Powder Chamber

E	=	3.62
P1 1)	=	13.87
P2 *	=	13.21

Junction Cone

α 1)*	=	60°
S *	=	53.79
r1 max	=	1.50
r2	=	2.00

Collar

H1 *	=	9.43
H2 1)	=	9.38

Commencement of Rifling

G1 1)*	=	8.60
G 1)	=	10.40
α1	=	90°
h	=	0.39
s *	=	2.00
i 1)*	=	0°45'
w	=	

Barrel

F 1)*	=	8.38
Z 1)	=	8.59

Grooves

b	=	4.27	
N	=	4	
u	=	304.80	
Q	=	57.03	mm²

Dimensions in << mm >>
Dimensions and Tolerances for Proof Barrels
see Appendix CR 1.

Notes:
1) Check for safety reasons
3) Headspace on Shoulder
* Basic dimensions