C.I.P.	8,5 x 68 Fanzoj Country of Origin: DE	TAB. I Date 12-05-30 Revision

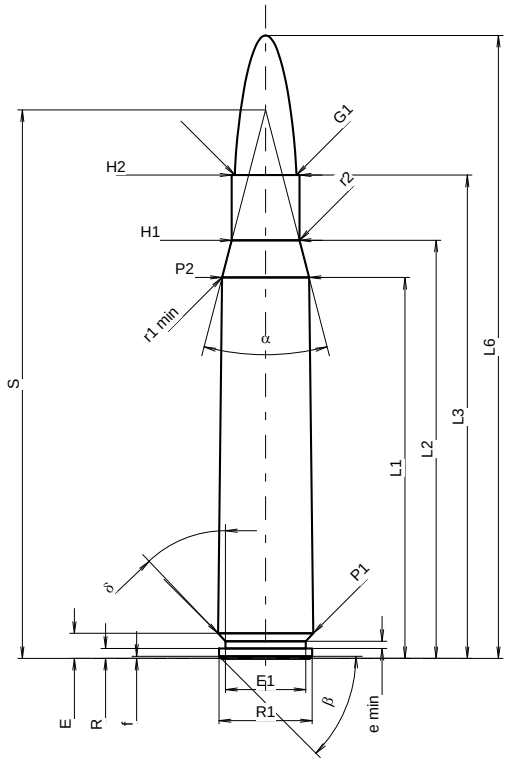

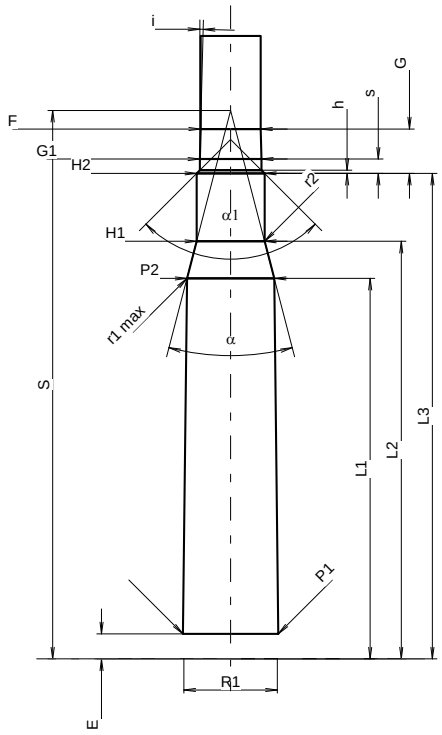

Scale 1:1.06

CARTRIDGE MAXI

Lengths

L1 1)	=	53.20	-0.20
L2 1)	=	58.40	-0.20
L3 1)	=	67.50	
L4	=		
L5	=		
L6	=	87.00	

Case Head

R	=	1.40
R1	=	13.00
R3	=	
E	=	3.50
E1	=	11.20
e min	=	1.00
δ	=	43°42'
f	=	0.30
β	=	45°

Powder Chamber

P1	=	13.30	
P2 1)*	=	12.15	-0.20

Junction Cone

α *	=	29°06'26"
S *	=	76.60
r1 min	=	0.50
r2	=	3.00

Collar

H1 *	=	9.45
H2 1)	=	9.45

Projectile

G1 1)	=	8.59
G2	=	
F	=	
L3+G 1)	=	73.70

Pressures (Energies)
Method Transducer

Pmax	=	4400	bar
PK	=	5060	bar
PE	=	5500	bar
M	=	25.00	
EE	=	5975	Joule

Miscellaneous Dimensions

Fe 1)3)	=	0.10
delta L	=	

CHAMBER MINI

Lengths

L1	=	53.14
L2	=	58.32
L3 1)	=	67.80

Breech

R	=	1.40
R1	=	13.05
R2	=	
R3	=	
r	=	

Powder Chamber

E	=	3.50
P1 1)	=	13.33
P2 *	=	12.18

Junction Cone

α 1)*	=	29°06'40"
S *	=	76.59
r1 max	=	0.50
r2	=	3.00

Collar

H1 *	=	9.49
H2 1)	=	9.49

Commencement of Rifling

G1 1)*	=	8.60
G 1)	=	6.20
α1	=	90°
h	=	0.45
s *	=	2.00
i 1)*	=	1°30'
w	=	

Barrel

F 1)*	=	8.38
Z 1)	=	8.59

Grooves

b	=	2.79	
N	=	6	
u	=	254.00	
Q	=	56.95	mm²

Dimensions in << mm >>
Dimensions and Tolerances for Proof Barrels
see Appendix CR1.

Notes:
1) Check for safety reasons
3) Headspace on Shoulder
* Basic dimensions