C.I.P.	9,3 RSM Country of Origin: DE	TAB.	I
		Date	11-05-25
		Revision	21-11-09

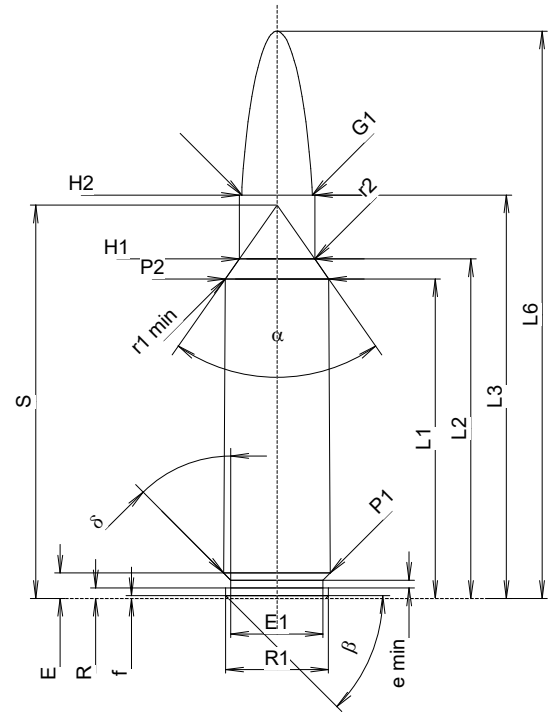

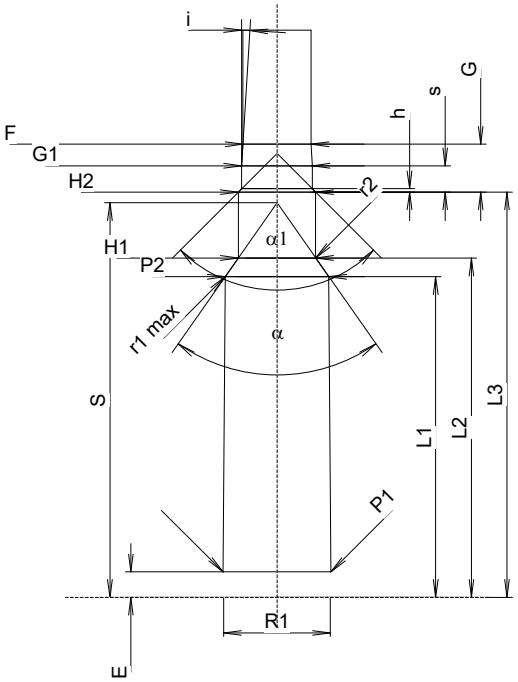

Scale 1:1

CARTRIDGE MAXI

Lengths

L1 1)	=	42.24	-0.20
L2 1)	=	44.88	-0.20
L3 1)	=	53.32	
L4	=		
L5	=		
L6	=	75.00	

Case Head

R	=	1.37
R1	=	13.59
R3	=	
E	=	3.36
E1	=	12.19
e min	=	1.02
δ	=	45°
f	=	0.36
β	=	45°

Powder Chamber

P1	=	14.12	
P2 1)*	=	13.67	-0.20

Junction Cone

α *	=	70°
S *	=	52.00
r1 min	=	0.80
r2	=	2.54

Collar

H1 *	=	9.98
H2 1)	=	9.98

Projectile

G1 1)	=	9.30
G2	=	
F	=	
L3+G 1)	=	59.66

Pressures (Energies)
Method Transducer

Pmax	=	4400	bar
PK	=	5060	bar
PE	=	5720	bar
M	=	25.00	
EE	=	5250	Joule

Miscellaneous Dimensions

Fe 1)3)	=	0.10
delta L	=	

CHAMBER MINI

Lengths

L1	=	42.40
L2	=	44.87
L3 1)	=	53.59

Breech

R	=	1.37
R1	=	14.13
R2	=	
R3	=	
r	=	

Powder Chamber

E	=	3.36
P1 1)	=	14.25
P2 *	=	13.70

Junction Cone

α 1)*	=	70°
S *	=	52.18
r1 max	=	1.27
r2	=	3.05

Collar

H1 *	=	10.24
H2 1)	=	10.24

Commencement of Rifling

G1 1)*	=	9.35
G 1)	=	6.34
α1	=	90°
h	=	0.45
s	=	3.48
i 1)*	=	3°30'
w	=	

Barrel

F 1)*	=	9.00
Z 1)	=	9.28

Grooves

b	=	4.60	
N	=	4	
u	=	406.40	
Q	=	66.32	mm²

Dimensions in << mm >>
Dimensions and Tolerances for Proof Barrels
see Appendix CR1.

Notes:
1) Check for safety reasons
3) Headspace on Shoulder
* Basic dimensions