C.I.P.	9,3 x 57 Country of Origin: DE	TAB.	I
		Date	07-05-14
		Revision	11-05-25

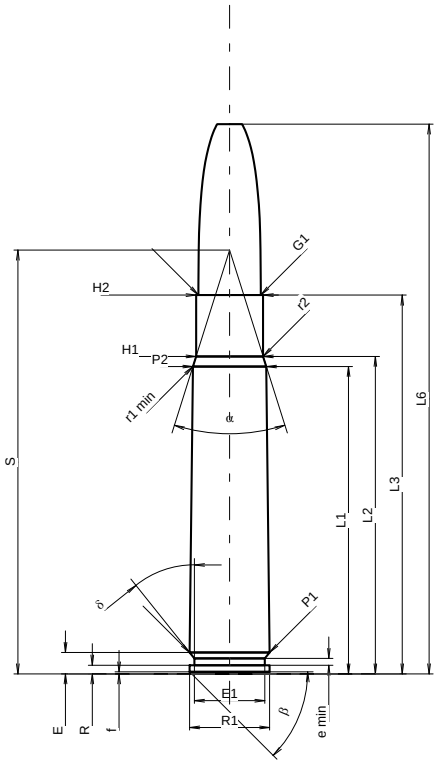

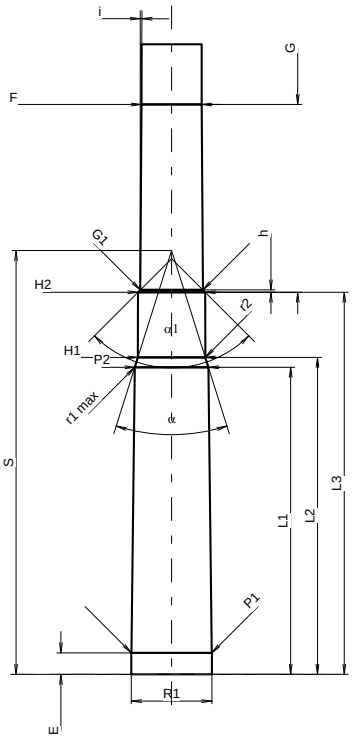

Scale 1:1.13

CARTRIDGE MAXI

Lengths

L1 *1)*	=	45.85	-0.20
L2 *1)*	=	47.36	-0.20
L3 *1)*	=	56.50	
L4	=		
L5	=		
L6	=	82.00	

Case Head

R	=	1.30	
R1	=	11.95	
R3	=		
E	=	3.20	
E1	=	10.50	
e min	=	1.00	
δ	=	38°39'36"	
f	=	0.30	
β	=	45°	

Powder Chamber

P1	=	11.94	
P2 *1)**	=	10.95	-0.20

Junction Cone

α *	=	35°	
S *	=	63.22	
r1 min	=	0.50	
r2	=	0.50	

Collar

H1 *	=	10.00	
H2 *1)*	=	10.00	

Projectile

G1 *1)*	=	9.30	
G2	=		
F	=		
L3+G *1)*	=	84.50	

Pressures (Energies)
Method Crusher

Pmax	=	3000	bar
PK	=	3450	bar
PE	=	3750	bar
M	=	25.00	
EE	=	4250	Joule

Miscellaneous Dimensions

Fe *1)3)*	=	0.15	
delta L	=		

CHAMBER MINI

Lengths

L1	=	45.81	
L2	=	47.28	
L3 *1)*	=	57.00	

Breech

R	=	1.30	
R1	=	12.00	
R2	=		
R3	=		
r	=		

Powder Chamber

E	=	3.20	
P1 *1)*	=	11.97	
P2 *	=	10.98	

Junction Cone

α *1)**	=	35°	
S *	=	63.22	
r1 max	=	0.50	
r2	=	0.50	

Collar

H1 *	=	10.05	
H2 *1)*	=	10.03	

Commencement of Rifling

G1 *1)**	=	9.35	
G *1)*	=	28.00	
α1 *1)*	=	90°	
h	=	0.34	
s	=		
i *1)**	=	0°21'45"	
w	=		

Barrel

F *1)**	=	9.00	
Z *1)*	=	9.28	

Grooves

b	=	4.60	
N	=	4	
u	=	360.00	
Q	=	66.32	mm²

Dimensions in << mm >>
Dimensions and Tolerances for Proof Barrels
see Appendix CR 1.

Notes:
1) Check for safety reasons
3) Headspace on Shoulder
* Basic dimensions