C.I.P.	9 x 39 Country of Origin: RU	TAB. I Date 18-05-16 Revision

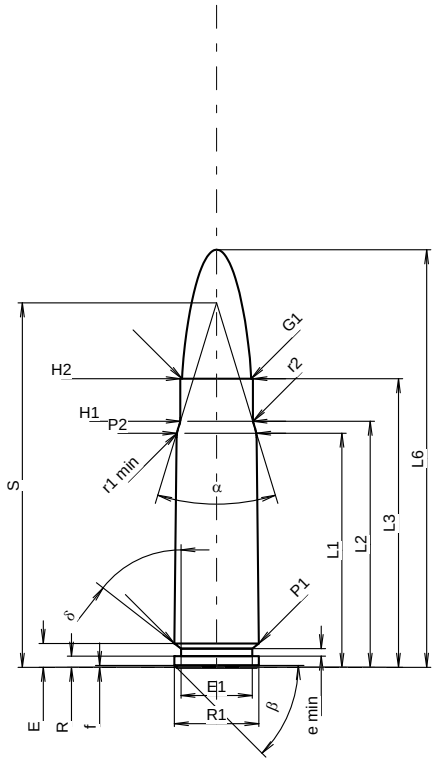

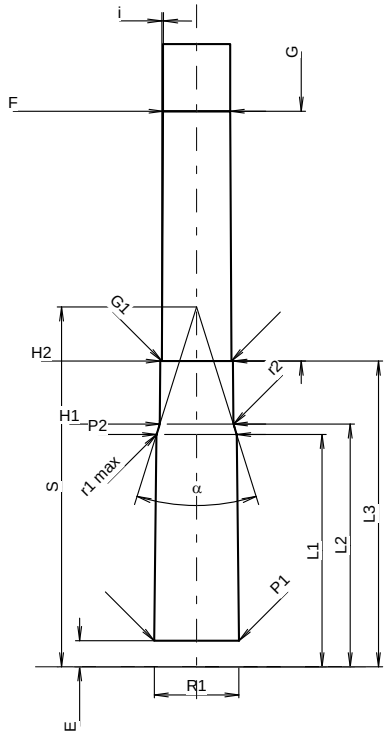

Scale 1:1.01

CARTRIDGE MAXI

Lengths

L1 1)	=	31.40	-0.20
L2 1)	=	33.00	-0.20
L3 1)	=	38.70	
L4	=		
L5	=		
L6	=	56.00	

Case Head

R	=	1.50
R1	=	11.33
R3	=	
E	=	3.20
E1	=	9.56
e min	=	1.00
δ	=	51°58'12"
f	=	0.25
β	=	45°

Powder Chamber

P1	=	11.35	
P2 1)*	=	10.70	-0.20

Junction Cone

α *	=	34°03'
S 1)	=	48.87
r1 min	=	4.00
r2	=	3.00

Collar

H1 *	=	9.72
H2 1)	=	9.72

Projectile

G1 1)	=	9.27
G2	=	
F	=	
L3+G 1)	=	72.20

Pressures (Energies)
Method Transducer

Pmax	=	3550	bar
PK	=	4083	bar
PE	=	4440	bar
M	=	25.00	
EE	=	2500	Joule

Miscellaneous Dimensions

Fe 3)	=	0.15
delta L	=	0.19

CHAMBER MINI

Lengths

L1	=	31.15
L2	=	32.55
L3 1)	=	41.00

Breech

R	=	1.50
R1	=	11.35
R2	=	
R3	=	
r	=	

Powder Chamber

E	=	3.50
P1 1)	=	11.36
P2 *	=	10.75

Junction Cone

α 1)*	=	34°54'
S *	=	48.25
r1 max	=	0.50
r2	=	3.00

Collar

H1 *	=	9.87
H2 1)	=	9.72

Commencement of Rifling

G1 1)*	=	9.35
G 1)	=	33.50
α1	=	
h	=	
s	=	
i 1)*	=	0°18'
w	=	

Barrel

F 1)*	=	9.00
Z 1)	=	9.27

Grooves

b	=	4.50	
N	=	4	
u	=	240.00	
Q	=	66.16	mm²

Dimensions in << mm >>
Dimensions and Tolerances for Proof Barrels
see Appendix CR1.

Notes:
1) Check for safety reasons
3) Headspace on Shoulder
* Basic dimensions