C.I.P.	30 TC Country of Origin: US	TAB. I Date 09-05-05 Revision

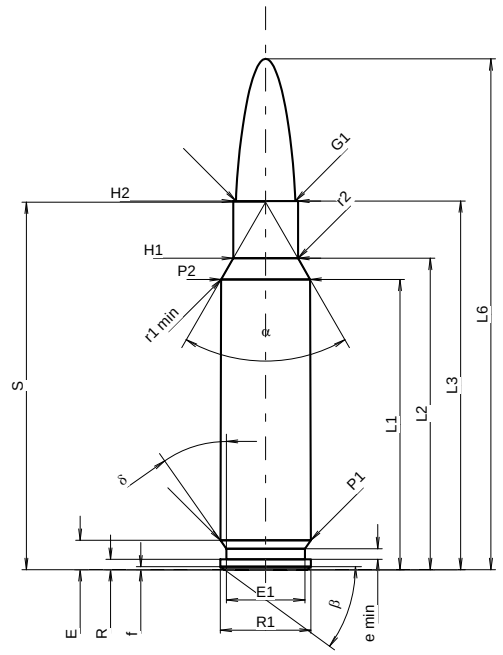

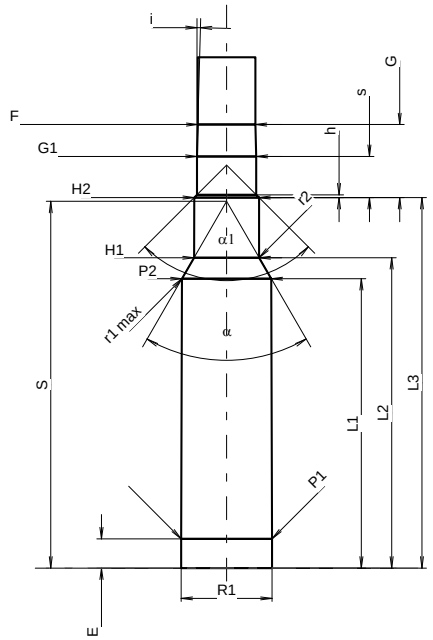

Scale 1:1

CARTRIDGE MAXI

Lengths

L1 1)	=	38.40	-0.20
L2 1)	=	41.19	-0.20
L3 1)	=	48.77	
L4	=		
L5	=		
L6	=	67.56	

Case Head

R	=	1.37	
R1	=	12.01	
R3	=		
E	=	3.88	
E1	=	10.39	
e min	=	1.40	
δ	=	35°	
f	=	0.38	
β	=	36°	

Powder Chamber

P1	=	11.95	
P2 1)*	=	11.78	-0.20

Junction Cone

α *	=	60°	
S *	=	48.61	
r1 min	=	1.93	
r2	=	3.17	

Collar

H1 *	=	8.56	
H2 1)	=	8.56	

Projectile

G1 1)	=	7.85	
G2	=		
F	=		
L3+G 1)	=	58.42	

Pressures (Energies)
Method Transducer

Pmax	=	4250	bar
PK	=	4888	bar
PE	=	5300	bar
M	=	25.00	
EE	=	4000	Joule

Miscellaneous Dimensions

Fe 1)3)	=	0.10	
delta L	=	0.09	

CHAMBER MINI

Lengths

L1	=	38.29	
L2	=	41.06	
L3 1)	=	49.02	

Breech

R	=		
R1	=	12.03	
R2	=		
R3	=		
r	=		

Powder Chamber

E	=	3.88	
P1 1)	=	12.03	
P2 *	=	11.81	

Junction Cone

α 1)*	=	60°	
S *	=	48.51	
r1 max	=	0.76	
r2	=	3.17	

Collar

H1 *	=	8.61	
H2 1)	=	8.58	

Commencement of Rifling

G1 1)*	=	7.84	
G 1)	=	9.65	
α1	=	90°	
h	=	0.37	
s *	=	5.45	
i 1)*	=	1°30'	
w	=		

Barrel

F 1)*	=	7.62	
Z 1)	=	7.82	

Grooves

b	=	4.47	
N	=	4	
u	=	305.00	
Q	=	47.51	mm²

Dimensions in << mm >>
Dimensions and Tolerances for Proof Barrels
see Appendix CR 1.

Notes:
1) Check for safety reasons
3) Headspace on Shoulder
* Basic dimensions