C.I.P.	30 - 284 Win.	TAB.	I
		Date	98-02-09
	Country of Origin: US	Revision	02-05-15

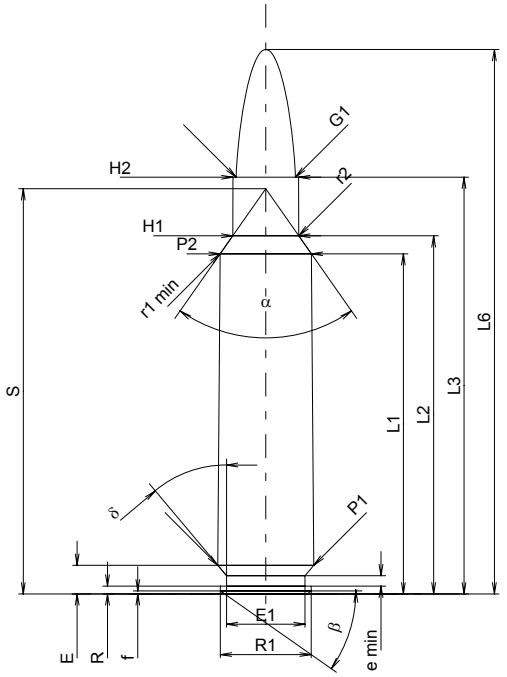

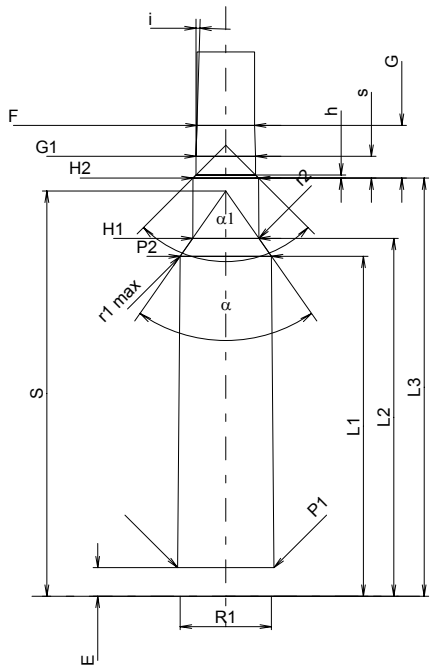

Scale 1:1

CARTRIDGE MAXI

Lengths

L1 1)	=	44.98	-0.20
L2 1)	=	47.36	-0.20
L3 1)	=	55.10	
L4	=		
L5	=		
L6	=	72.00	

Case Head

R	=	1.02
R1	=	12.01
R3	=	
E	=	3.78
E1	=	10.39
e min	=	1.37
δ	=	40°
f	=	0.38
β	=	35°

Powder Chamber

P1	=	12.72	
P2 1)*	=	12.06	-0.20

Junction Cone

α *	=	70°
S *	=	53.59
r1 min	=	0.80
r2	=	3.20

Collar

H1 *	=	8.72
H2 1)	=	8.67

Projectile

G1 1)	=	7.85
G2	=	
F 1)	=	
L3+G	=	62.08

Pressures (Energies)
Method Transducer

Pmax	=	3800	bar
PK	=	4370	bar
PE	=	4750	bar
M	=	25.00	
EE	=	4300	Joule

Miscellaneous Dimensions

Fe 1)	=	0.15
delta L	=	

CHAMBER MINI

Lengths

L1	=	44.96
L2	=	47.34
L3 1)	=	55.30

Breech

R	=	
R1	=	12.04
R2	=	
R3	=	
r	=	

Powder Chamber

E	=	3.78
P1 1)	=	12.75
P2 *	=	12.09

Junction Cone

α 1)*	=	70°
S *	=	53.59
r1 max	=	0.80
r2	=	3.20

Collar

H1 *	=	8.75
H2 1)	=	8.70

Commencement of Rifling

G1 1)*	=	7.87
G 1)	=	6.98
α1	=	90°
h	=	0.42
s *	=	2.89
i 1)*	=	1°45'
w	=	

Barrel

F 1)*	=	7.62
Z 1)	=	7.82

Grooves

b	=	4.47	
N	=	4	
u	=	305.00	
Q	=	47.51	mm²

Dimensions in << mm >>
Dimensions and Tolerances for Proof Barrels
see Appendix CR 1.

Notes: 1) Check for safety reasons
* Basic dimensions