C.I.P.	6,5 - 284 Norma Country of Origin: SE	TAB.	I
		Date	00-02-15
		Revision	08-04-15

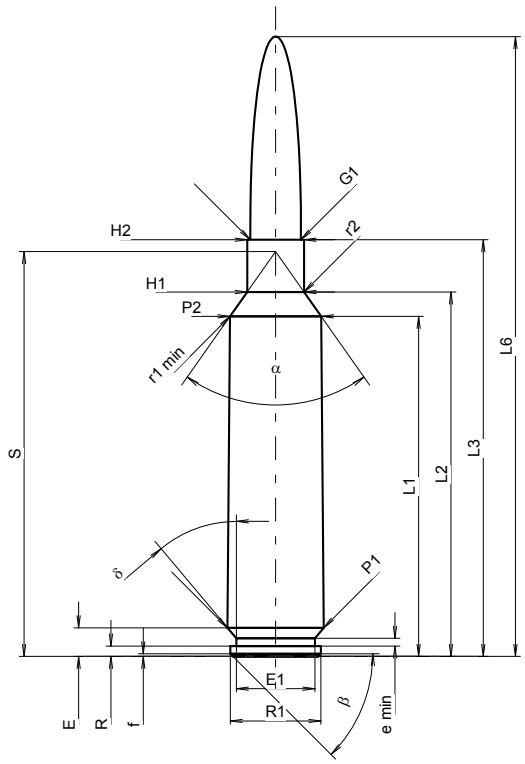

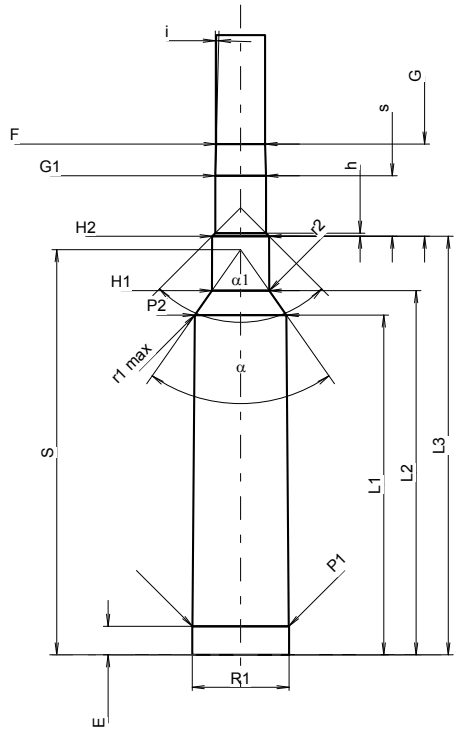

Scale 1:1

CARTRIDGE MAXI

Lengths

L1 1)	=	44.98	-0.20
L2 1)	=	48.20	-0.20
L3 1)	=	55.12	
L4	=		
L5	=		
L6	=	82.00	

Case Head

R	=	1.37
R1	=	12.01
R3	=	
E	=	3.78
E1	=	10.39
e min	=	1.02
δ	=	40°
f	=	0.35
β	=	45°

Powder Chamber

P1	=	12.72	
P2 1)*	=	12.06	-0.20

Junction Cone

α *	=	70°14'46"
S *	=	53.55
r1 min	=	0.76
r2	=	3.18

Collar

H1 *	=	7.53
H2 1)	=	7.53

Projectile

G1 1)	=	6.71
G2	=	
F	=	
L3+G 1)	=	67.34

Pressures (Energies)
Method Transducer

Pmax	=	4100	bar
PK	=	4715	bar
PE	=	5125	bar
M	=	25.00	
EE	=	3200	Joule

Miscellaneous Dimensions

Fe 1)3)	=	0.10
delta L	=	

CHAMBER MINI

Lengths

L1	=	44.96
L2	=	48.18
L3 1)	=	55.37

Breech

R	=	
R1	=	12.81
R2	=	
R3	=	
r	=	

Powder Chamber

E	=	3.78
P1 1)	=	12.75
P2 *	=	12.09

Junction Cone

α 1)*	=	70°
S *	=	53.59
r1 max	=	0.76
r2	=	3.18

Collar

H1 *	=	7.58
H2 1)	=	7.55

Commencement of Rifling

G1 1)*	=	6.72
G 1)	=	12.22
α1 *	=	90°
h	=	0.42
s	=	8.02
i 1)	=	1°30'
w	=	

Barrel

F 1)*	=	6.50
Z 1)	=	6.71

Grooves

b	=	2.29	
N	=	6	
u	=	228.60	
Q	=	34.66	mm²

Dimensions in << mm >>
Dimensions and Tolerances for Proof Barrels
see Appendix CR 1.

Notes:
1) Check for safety reasons
3) Headspace on Shoulder
* Basic dimensions