C.I.P.	6,5 x 63 Messner Mag.	TAB.	I
		Date	02-01-22
	Country of Origin: FR	Revision	02-05-15

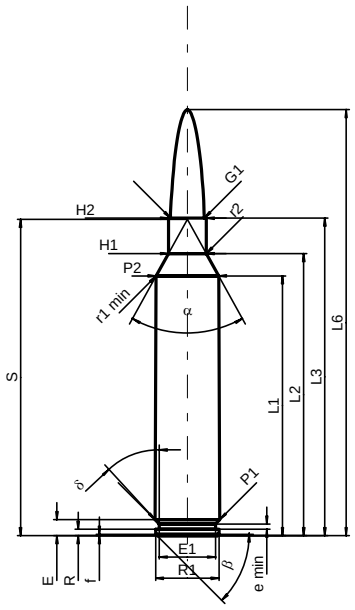

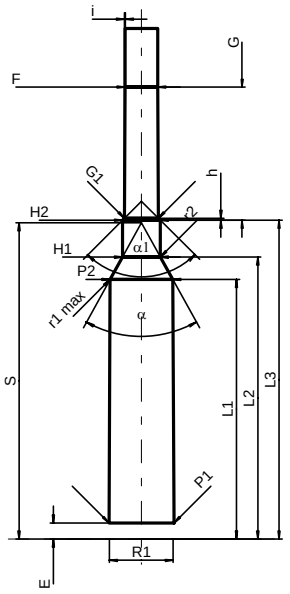

Scale 1:1.5

CARTRIDGE MAXI

Lengths

L1 1)*	=	51.55	-0.20
L2 1)*	=	55.96	-0.20
L3 1)	=	63.00	
L4	=		
L5	=		
L6	=	84.50	

Case Head

R	=	1.30
R1	=	12.63
R3	=	
E	=	3.20
E1	=	11.20
e min	=	1.00
δ	=	43°
f	=	0.30
β	=	45°

Powder Chamber

P1	=	12.85	
P2 1)*	=	12.40	-0.20

Junction Cone

α	=	57°54'38"
S	=	62.76
r1 min	=	0.67
r2	=	2.00

Collar

H1 *	=	7.52
H2 1)	=	7.52

Projectile

G1 1)	=	6.71
G2	=	
F	=	
L3+G 1)	=	89.41

Pressures (Energies)
Method Transducer

Pmax	=	4400	bar
PK	=	5060	bar
PE	=	5500	bar
M	=	25.00	
EE	=	4200	Joule

Miscellaneous Dimensions

Fe 1)	=	0.10
delta L	=	

CHAMBER MINI

Lengths

L1 *	=	51.53
L2 *	=	55.93
L3 1)	=	63.25

Breech

R	=	1.30
R1	=	12.65
R2	=	
R3	=	
r	=	

Powder Chamber

E	=	3.20
P1 1)	=	12.88
P2 *	=	12.43

Junction Cone

α 1)	=	58°01'15"
S	=	62.74
r1 max	=	0.34
r2	=	2.00

Collar

H1 *	=	7.55
H2 1)	=	7.55

Commencement of Rifling

G1 1)*	=	6.71
G 1)*	=	26.41
α1	=	90°
h *	=	0.42
s	=	
i 1)	=	0°17'12"
w	=	

Barrel

F 1)*	=	6.45
Z 1)	=	6.70

Grooves

b	=	3.50	
N	=	4	
u	=	200.00	
Q	=	34.52	mm²

Dimensions in << mm >>
Dimensions and Tolerances for Proof Barrels
see Appendix CR 1.

Notes: 1) Check for safety reasons
* Basic dimensions