C.I.P.	7,65 x 53 Arg. Country of Origin: DE	TAB.	I
		Date	84-06-14
		Revision	02-05-15

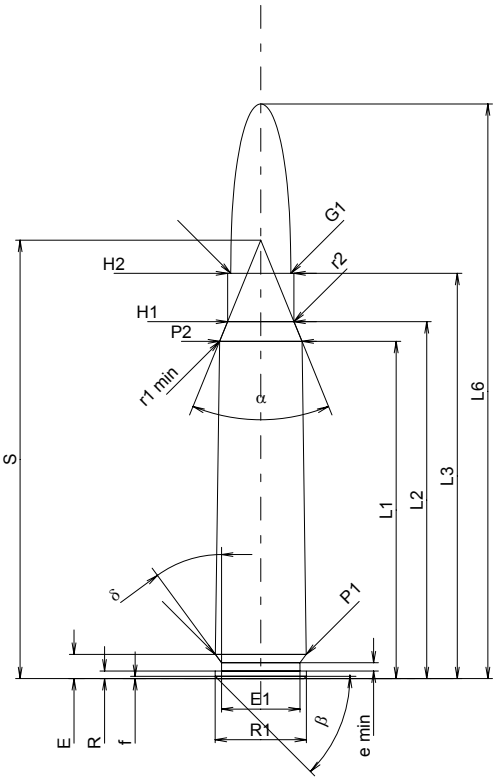

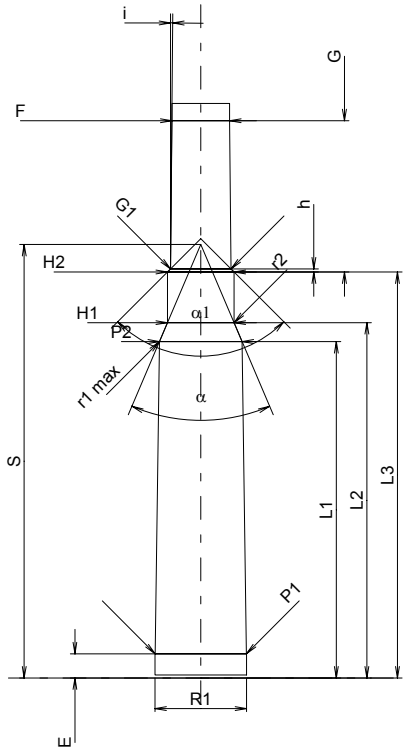

Scale 1:1

CARTRIDGE MAXI

Lengths

L1 1)*	=	44.60	-0.20
L2 1)*	=	47.20	-0.20
L3 1)	=	53.60	
L4	=		
L5	=		
L6	=	76.00	

Case Head

R	=	1.00
R1	=	12.05
R3	=	
E	=	3.20
E1	=	10.40
e min	=	1.10
δ	=	35°41'24"
f	=	0.30
β	=	45°

Powder Chamber

P1	=	12.01	
P2 1)*	=	10.90	-0.20

Junction Cone

α	=	44°21'38"
S	=	57.97
r1 min	=	2.20
r2	=	2.20

Collar

H1 1)*	=	8.78
H2	=	8.78

Projectile

G1 1)	=	7.94
G2	=	
F	=	
L3+G 1)	=	73.60

Pressures (Energies)
Method Transducer

Pmax	=	3900	bar
PK	=	4485	bar
PE	=	4875	bar
M	=	25.00	
EE	=	3700	Joule

Miscellaneous Dimensions

Fe 1)	=	0.10
delta L	=	

CHAMBER MINI

Lengths

L1 *	=	44.50
L2 *	=	47.00
L3 1)	=	53.70

Breech

R	=	1.00
R1	=	12.13
R2	=	
R3	=	
r	=	

Powder Chamber

E	=	3.20
P1 1)	=	12.05
P2 *	=	10.93

Junction Cone

α 1)	=	46°08'52"
S	=	57.33
r1 max	=	2.20
r2	=	2.20

Collar

H1 *	=	8.80
H2 1)	=	8.80

Commencement of Rifling

G1 1)*	=	8.00
G 1)*	=	20.00
α1	=	90°
h *	=	0.40
s	=	
i 1)	=	0°30'41"
w	=	

Barrel

F 1)*	=	7.65
Z 1)	=	7.92

Grooves

b	=	4.20	
N	=	4	
u	=	280.00	
Q	=	48.36	mm²

Dimensions in << mm >>
Dimensions and Tolerances for Proof Barrels
see Appendix CR 1.

Notes: 1) Check for safety reasons
* Basic dimensions