C.I.P.

255 GS

Country of Origin: IT

TAB.	I
Date	10-05-26
Revision	

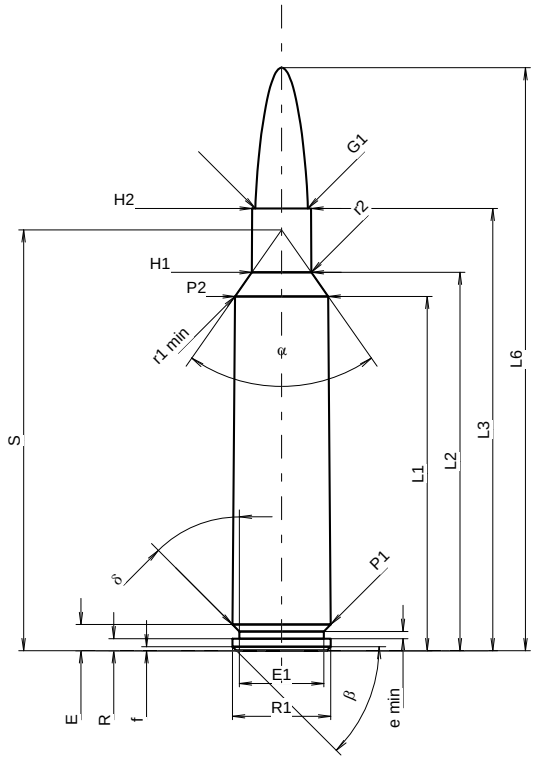

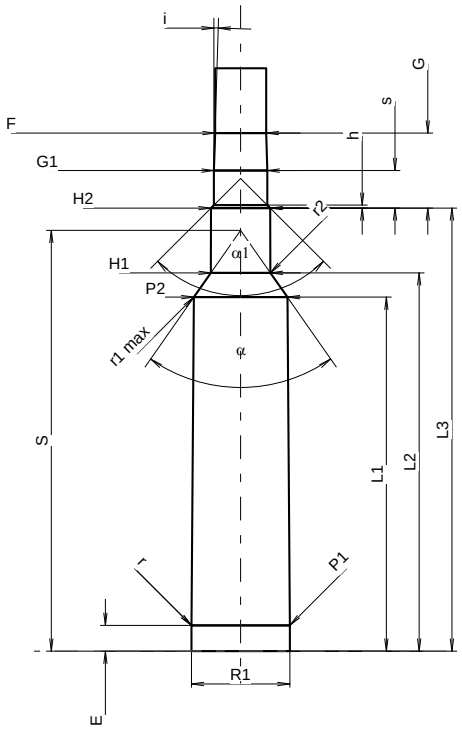

Scale 1.06:1

CARTRIDGE MAXI

Lengths

L1 1)	=	44.06	-0.20
L2 1)	=	47.06	-0.20
L3 1)	=	55.00	
L4	=		
L5	=		
L6	=	72.50	

Case Head

R	=	1.50
R1	=	12.20
R3	=	
E	=	3.25
E1	=	10.50
e min	=	0.90
δ	=	45°
f	=	0.50
β	=	45°

Powder Chamber

P1	=	12.20	
P2 1)*	=	11.58	-0.20

Junction Cone

α *	=	70°
S *	=	52.33
r1 min	=	0.76
r2	=	3.18

Collar

H1 *	=	7.38
H2 1)	=	7.33

Projectile

G1 1)	=	6.54
G2	=	
F	=	
L3+G 1)	=	64.34

Pressures (Energies)
Method Transducer

Pmax	=	4400	bar
PK	=	5060	bar
PE	=	5500	bar
M	=	25.00	
EE	=	3700	Joule

Miscellaneous Dimensions

Fe 1)3)	=	0.10
delta L	=	

CHAMBER MINI

Lengths

L1	=	44.02
L2	=	47.05
L3 1)	=	55.10

Breech

R	=	1.50
R1	=	12.23
R2	=	
R3	=	
r	=	0.40

Powder Chamber

E	=	3.20
P1 1)	=	12.23
P2 *	=	11.64

Junction Cone

α 1)*	=	70°
S *	=	52.34
r1 max	=	0.76
r2	=	3.18

Collar

H1 *	=	7.40
H2 1)	=	7.35

Commencement of Rifling

G1 1)*	=	6.63
G 1)	=	9.34
α1	=	90°
h	=	0.36
s *	=	4.67
i 1)*	=	1°43'2"
w	=	

Barrel

F 1)*	=	6.35
Z 1)	=	6.53

Grooves

b	=	2.44	
N	=	6	
u	=	254.00	
Q	=	33.02	mm²

Dimensions in << mm >>
Dimensions and Tolerances for Proof Barrels
see Appendix CR 1.

Notes:
1) Check for safety reasons
3) Headspace on Shoulder
* Basic dimensions