C.I.P.	300/295 Rook Rifle Country of Origin: GB	TAB. II Date 84-06-14 Revision 11-05-25

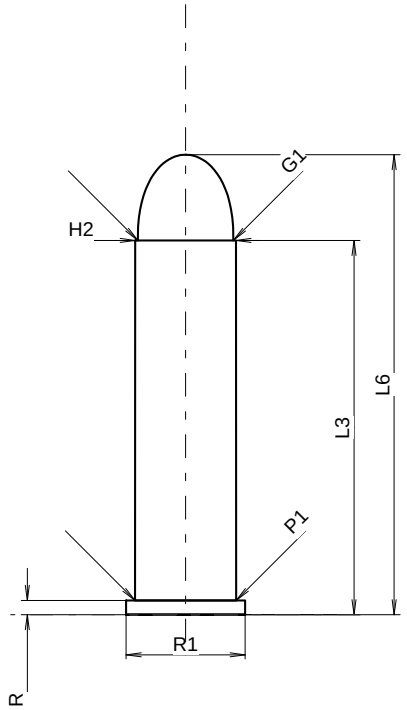

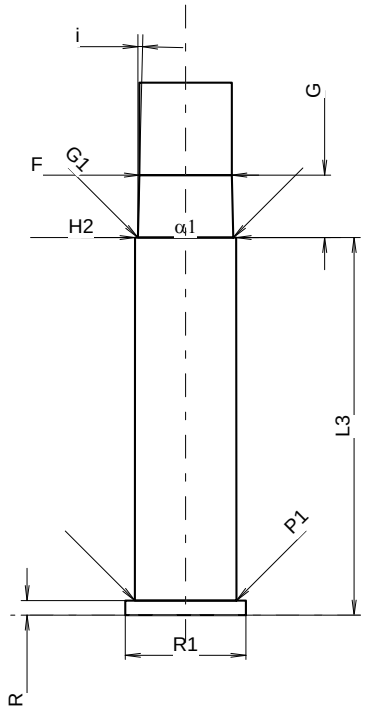

Scale 1.65:1

CARTRIDGE MAXI

Lengths

L1	=		
L2	=		
L3 1)	=	29.97	
L4	=		
L5	=		
L6	=	36.83	

Case Head

R 1)	=	1.14	-0.25
R1	=	9.52	
R3	=		
E	=		
E1	=		
e min	=		
δ	=		
f	=		
β	=		

Powder Chamber

P1	=	8.10
P2	=	

Junction Cone

α	=	
S	=	
r1 min	=	
r2	=	

Collar

H1	=	
H2 1)	=	8.08

Projectile

G1 1)	=	7.65
G2	=	
F	=	
L3+G 1)	=	34.97

Pressures (Energies)
Method Transducer

Pmax	=	1200	bar
PK	=	1380	bar
PE	=	1500	bar
M	=	17.50	
EE	=	375	Joule

Miscellaneous Dimensions

Fe 1)4)	=	0.15
delta L	=	

CHAMBER MINI

Lengths

L1	=	
L2	=	
L3 1)	=	30.23

Breech

R 1)	=	1.17
R1	=	9.65
R2	=	
R3	=	
r	=	

Powder Chamber

E	=	
P1 1)	=	8.13
P2	=	

Junction Cone

α	=	
S	=	
r1 max	=	
r2	=	

Collar

H1	=	
H2 1)	=	8.10

Commencement of Rifling

G1 1)*	=	7.65
G 1)*	=	5.00
α1	=	180°
h	=	
s	=	
i 1)	=	1°25'55"
w	=	

Barrel

F 1)*	=	7.40
Z 1)	=	7.62

Grooves

b	=		
N	=		
u	=	508.00	
Q	=	43.01	mm²

Dimensions in << mm >>
Dimensions and Tolerances for Proof Barrels
see Appendix CR 1.

Notes:
1) Check for safety reasons
4) Headspace on Rim
* Basic dimensions