C.I.P.	32 Win. Spec.	TAB.	II
		Date	84-06-14
	Country of Origin: US	Revision	22-04-26

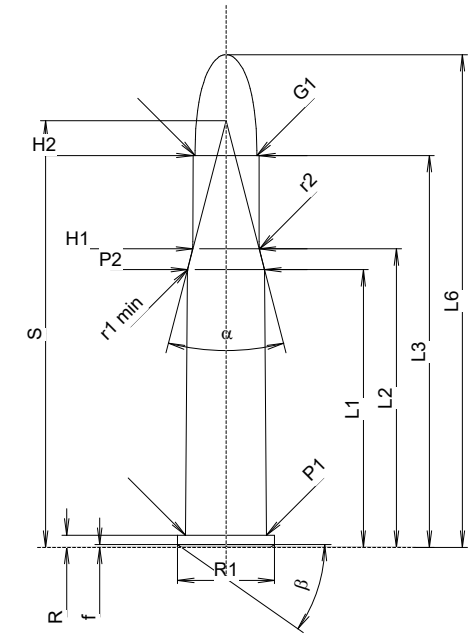

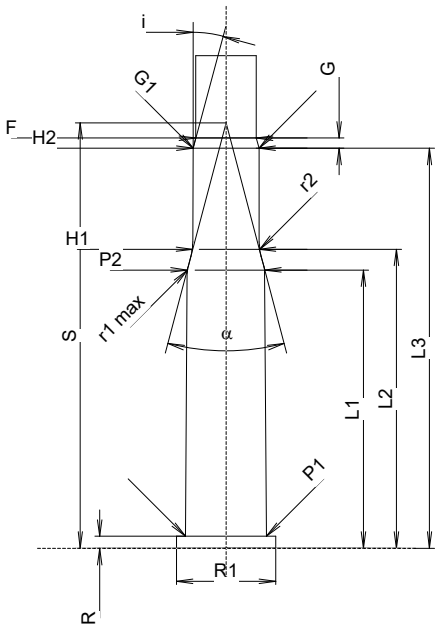

Scale 1:1

CARTRIDGE MAXI

Lengths

L1	=	36.72	
L2	=	39.47	
L3 1)	=	51.82	
L4	=		
L5	=		
L6	=	65.15	

Case Head

R 1)	=	1.60	-0.25
R1	=	12.85	
R3	=		
E	=		
E1	=		
e min	=		
δ	=	0°	
f	=	0.38	
β	=	35°	

Powder Chamber

P1	=	10.72
P2 *	=	10.20

Junction Cone

α *	=	29°02'
S *	=	56.42
r1 min	=	3.81
r2	=	7.62

Collar

H1 *	=	8.78
H2 1)	=	8.71

Projectile

G1 1)	=	8.18
G2	=	
F	=	
L3+G 1)	=	53.16

Pressures (Energies)
Method Transducer

Pmax	=	3050	bar
PK	=	3508	bar
PE	=	3810	bar
M	=	25.00	
EE	=	2370	Joule

Miscellaneous Dimensions

Fe 1)4)	=	0.15
delta L	=	

CHAMBER MINI

Lengths

L1	=	36.82
L2	=	39.56
L3 1)	=	52.91

Breech

R 1)	=	1.60
R1	=	13.11
R2	=	
R3	=	
r	=	

Powder Chamber

E	=	
P1 1)	=	10.74
P2 *	=	10.24

Junction Cone

α *	=	29°28'
S *	=	56.29
r1 max	=	3.81
r2	=	7.62

Collar

H1 *	=	8.80
H2 1)	=	8.72

Commencement of Rifling

G1 1)*	=	8.72
G 1)	=	1.34
α1 *	=	
h	=	
s	=	
i 1)*	=	15°
w	=	

Barrel

F 1)*	=	8.00
Z 1)	=	8.13

Grooves

b	=	2.69	
N	=	6	
u	=	406.00	
Q	=	51.34	mm²

Dimensions in << mm >>
Dimensions and Tolerances for Proof Barrels
see Appendix CR 1.

Notes:
1) Check for safety reasons
4) Headspace on Rim
* Basic dimensions