C.I.P.	375 Fl. Mag. N.E.	TAB.	II
		Date	84-06-14
	Country of Origin: GB	Revision	13-05-22

Alternative Names: 375 H&H Fl. Mag. N.E.

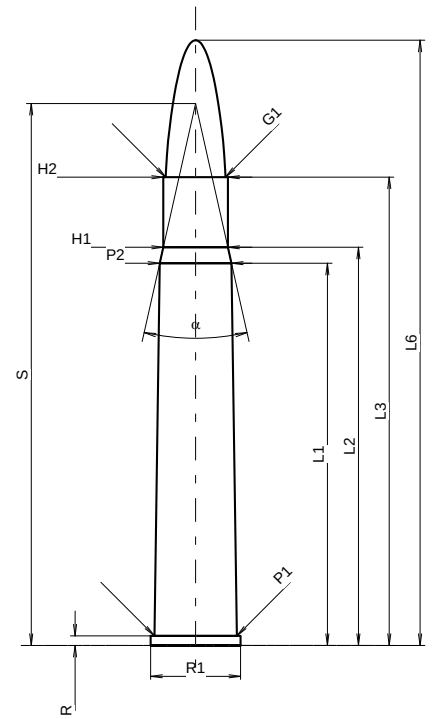

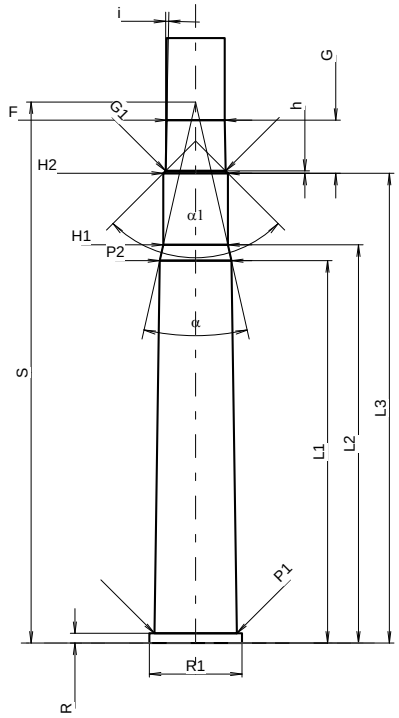

Scale 1:1.21

CARTRIDGE MAXI

Lengths

L1 *	=	60.96	
L2 *	=	63.50	
L3 *1)*	=	74.68	
L4	=		
L5	=		
L6	=	96.52	

Case Head

R *1)*	=	1.52	-0.25
R1	=	14.35	
R3	=		
E	=		
E1	=		
e min	=		
δ	=		
f	=		
β	=		

Powder Chamber

P1	=	13.13
P2 *	=	11.43

Junction Cone

α	=	25°17'47"
S	=	86.43
r1 min	=	
r2	=	

Collar

H1 *	=	10.29
H2 *1)*	=	10.29

Projectile

G1 *1)*	=	9.52
G2	=	
F	=	
L3+G *1)*	=	83.15

Pressures (Energies)
Method Transducer

Pmax	=	3250	bar
PK	=	3738	bar
PE	=	4060	bar
M	=	25.00	
EE	=	5925	Joule

Miscellaneous Dimensions

Fe *1)4)*	=	0.15
delta L	=	

CHAMBER MINI

Lengths

L1 *	=	60.99
L2 *	=	63.53
L3 *1)*	=	74.93

Breech

R *1)*	=	1.55
R1	=	14.78
R2	=	
R3	=	
r	=	

Powder Chamber

E	=	
P1 *1)*	=	13.16
P2 *	=	11.46

Junction Cone

α	=	25°30'39"
S	=	86.30
r1 max	=	
r2	=	

Collar

H1 *	=	10.31
H2 *1)*	=	10.31

Commencement of Rifling

G1 *1)**	=	9.58
G *1)**	=	8.47
α1	=	90°
h *	=	0.37
s	=	
i *1)*	=	1°10'
w	=	

Barrel

F *1)**	=	9.25
Z *1)*	=	9.50

Grooves

b	=	2.92	
N	=	6	
u	=	406.00	
Q	=	69.43	mm²

Dimensions in << mm >>
Dimensions and Tolerances for Proof Barrels
see Appendix CR 1.

Notes:
1) Check for safety reasons
4) Headspace on Rim
* Basic dimensions

Reproduction forbidden as well as in the form of extracts without approval of C.I.P.