C.I.P.	8,5 x 63 R Country of Origin: DE	TAB. II Date 92-02-27 Revision 21-04-07

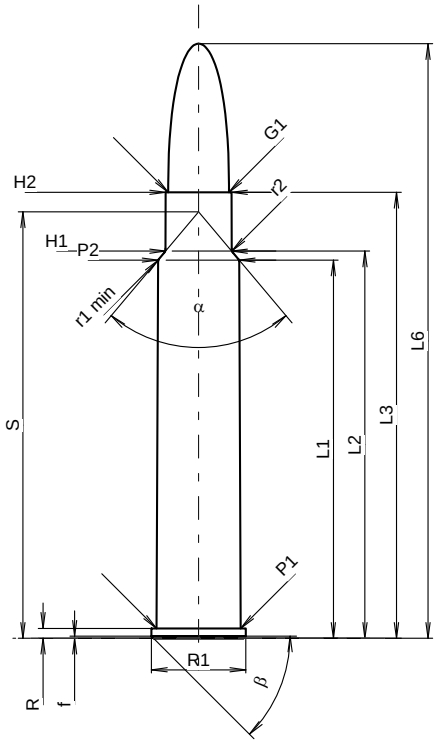

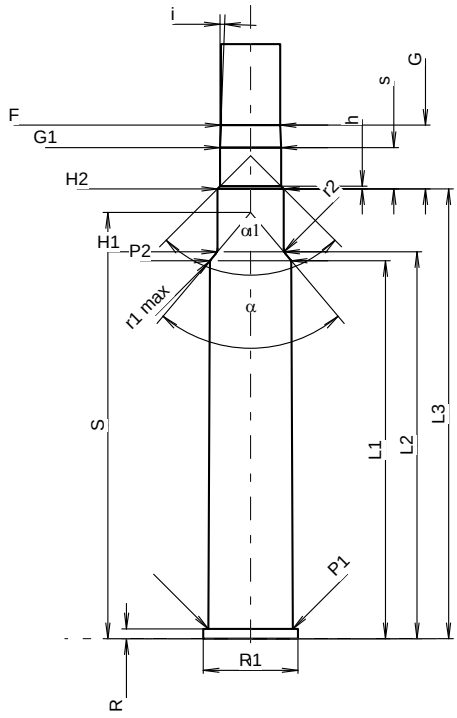

Scale 1:1.07

CARTRIDGE MAXI

Lengths

L1 *	=	53.42	
L2 *	=	54.69	
L3 1)	=	63.00	
L4	=		
L5	=		
L6	=	84.00	

Case Head

R 1)	=	1.40	-0.25
R1	=	13.32	
R3	=		
E	=		
E1	=		
e min	=		
δ	=		
f	=	0.30	
β	=	45°	

Powder Chamber

P1	=	11.91
P2 *	=	11.47

Junction Cone

α	=	80°13'47"
S	=	60.23
r1 min	=	0.50
r2	=	1.00

Collar

H1 *	=	9.33
H2 1)	=	9.32

Projectile

G1 1)	=	8.59
G2	=	
F	=	
L3+G 1)	=	72.00

Pressures (Energies)
Method Transducer

Pmax	=	3800	bar
PK	=	4370	bar
PE	=	4750	bar
M	=	25.00	
EE	=	5145	Joule

Miscellaneous Dimensions

Fe 1)4)	=	0.15
delta L	=	

CHAMBER MINI

Lengths

L1 *	=	53.40
L2 *	=	54.67
L3 1)	=	63.55

Breech

R 1)	=	1.40
R1	=	13.37
R2	=	
R3	=	
r	=	

Powder Chamber

E	=	
P1 1)	=	11.94
P2 *	=	11.50

Junction Cone

α	=	80°13'47"
S	=	60.22
r1 max	=	0.50
r2	=	1.25

Collar

H1 *	=	9.36
H2 1)	=	9.35

Commencement of Rifling

G1 1)*	=	8.61
G 1)*	=	9.00
α1	=	90°
h	=	0.37
s *	=	5.83
i 1)	=	2°04'40"
w	=	

Barrel

F 1)*	=	8.38
Z 1)	=	8.59

Grooves

b	=	2.79	
N	=	6	
u	=	254.00	
Q	=	56.95	mm²

Dimensions in << mm >>
Dimensions and Tolerances for Proof Barrels
see Appendix CR 1.

Notes:
1) Check for safety reasons
4) Headspace on Rim
* Basic dimensions