C.I.P.	9,3 x 74 R Country of Origin: DE	TAB. II Date 84-06-14 Revision 06-05-16

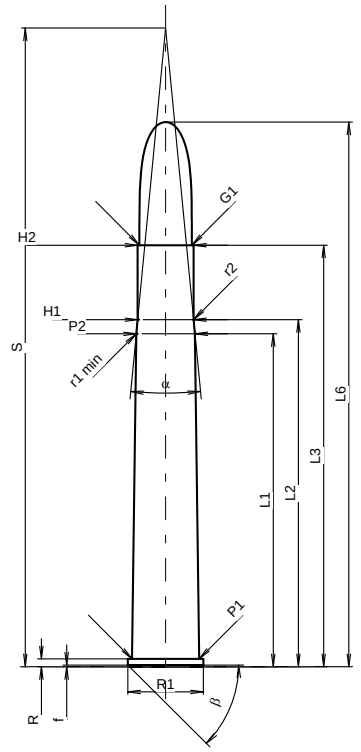

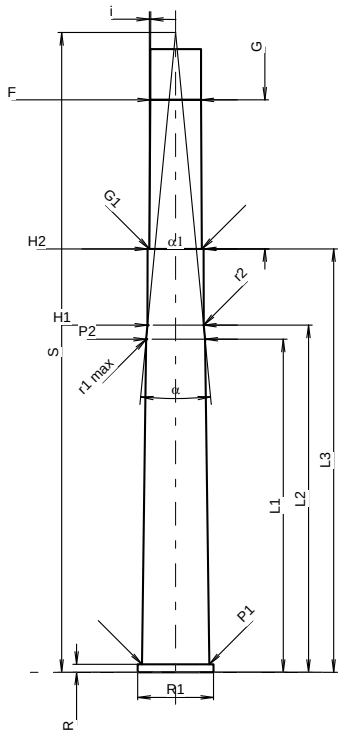

Scale 1:1.34

CARTRIDGE MAXI

Lengths

L1 *	=	59.00	
L2 *	=	61.50	
L3 1)	=	74.70	
L4	=		
L5	=		
L6	=	96.50	

Case Head

R 1)	=	1.40	-0.25
R1	=	13.35	
R3	=		
E	=		
E1	=		
e min	=		
δ	=		
f	=	0.30	
β	=	45°	

Powder Chamber

P1	=	11.90
P2 *	=	10.40

Junction Cone

α	=	10°58'
S	=	113.17
r1 min	=	0.50
r2	=	0.50

Collar

H1 *	=	9.92
H2 1)	=	9.92

Projectile

G1 1)	=	9.30
G2	=	
F	=	
L3+G 1)	=	101.10

Pressures (Energies)
Method Transducer

Pmax	=	3400	bar
PK	=	3910	bar
PE	=	4250	bar
M	=	25.00	
EE	=	5045	Joule

Miscellaneous Dimensions

Fe 1)	=	0.15
delta L	=	

CHAMBER MINI

Lengths

L1 *	=	59.00
L2 *	=	61.50
L3 1)	=	75.00

Breech

R 1)	=	1.40
R1	=	13.40
R2	=	
R3	=	
r	=	

Powder Chamber

E	=	
P1 1)	=	11.93
P2 *	=	10.43

Junction Cone

α	=	10°58'
S	=	113.33
r1 max	=	0.50
r2	=	0.50

Collar

H1 *	=	9.95
H2 1)	=	9.94

Commencement of Rifling

G1 1)*	=	9.33
G 1)*	=	26.40
α1	=	180°
h	=	
s	=	
i 1)	=	0°21'29"
w	=	

Barrel

F 1)*	=	9.00
Z 1)	=	9.28

Grooves

b	=	4.60	
N	=	4	
u	=	360.00	
Q	=	66.32	mm²

Dimensions in << mm >>
Dimensions and Tolerances for Proof Barrels
see Appendix CR 1.

Notes: 1) Check for safety reasons
* Basic dimensions