C.I.P.	8 x 56 R M30S Country of Origin: AT	TAB. II Date 88-01-30 Revision 06-08-02

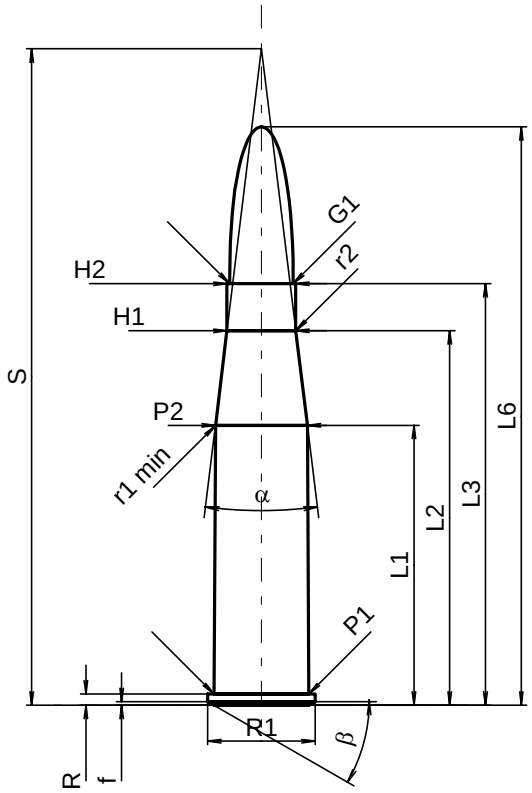

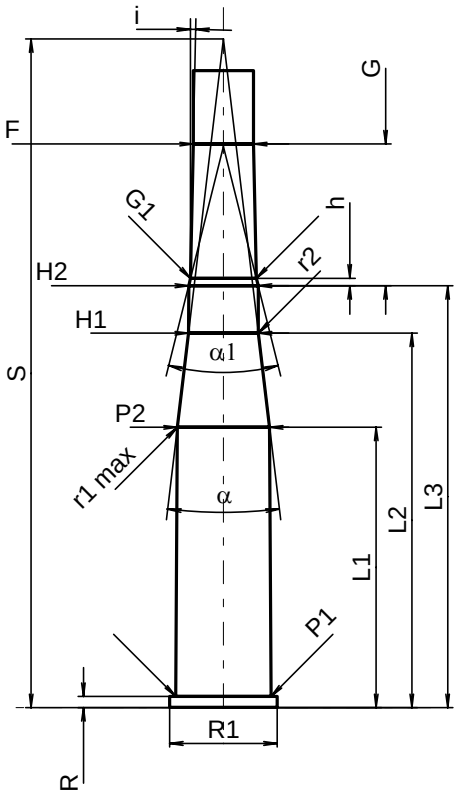

Scale 1:1

CARTRIDGE MAXI

Lengths

L1 *	=	37.03	
L2 *	=	49.53	
L3 1)	=	55.75	
L4	=		
L5	=		
L6	=	76.50	

Case Head

R 1)	=	1.50	-0.25
R1	=	14.20	
R3	=		
E	=		
E1	=		
e min	=		
δ	=		
f	=	0.50	
β	=	30°	

Powder Chamber

P1	=	12.55
P2 *	=	12.15

Junction Cone

α	=	13°54'41"
S	=	86.82
r1 min	=	10.00
r2	=	15.00

Collar

H1 *	=	9.10
H2 1)	=	9.10

Projectile

G1 1)	=	8.40
G2	=	
F	=	
L3+G 1)	=	74.50

Pressures (Energies)
Method Transducer

Pmax	=	3550	bar
PK	=	4083	bar
PE	=	4440	bar
M	=	25.00	
EE	=	3933	Joule

Miscellaneous Dimensions

Fe 1)	=	0.15
delta L	=	

CHAMBER MINI

Lengths

L1 *	=	37.08
L2 *	=	49.53
L3 1)	=	55.80

Breech

R 1)	=	1.50
R1	=	14.20
R2	=	
R3	=	
r	=	

Powder Chamber

E	=	
P1 1)	=	12.60
P2 *	=	12.21

Junction Cone

α	=	13°33'30"
S	=	88.43
r1 max	=	10.00
r2	=	10.00

Collar

H1 *	=	9.25
H2 1)	=	9.20

Commencement of Rifling

G1 1)*	=	8.70
G 1)*	=	18.75
α1	=	28°4'
h *	=	1.00
s	=	
i 1)	=	1°12'37"
w	=	

Barrel

F 1)*	=	7.95
Z 1)	=	8.35

Grooves

b	=	3.50	
N	=	4	
u	=	250.00	
Q	=	52.53	mm²

Dimensions in << mm >>
Dimensions and Tolerances for Proof Barrels
see Appendix CR 1.

Notes: 1) Check for safety reasons
* Basic dimensions