C.I.P.	280 Fl. N. E. Country of Origin: GB	TAB. II Date 84-06-14 Revision 02-05-15

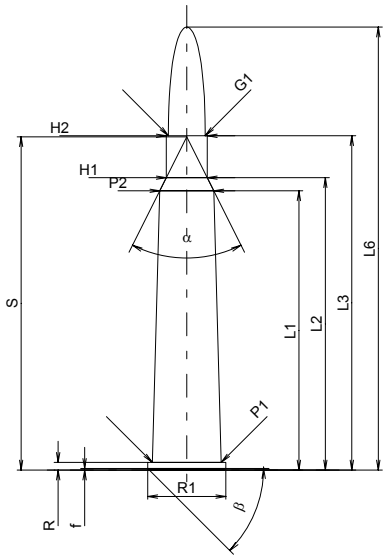

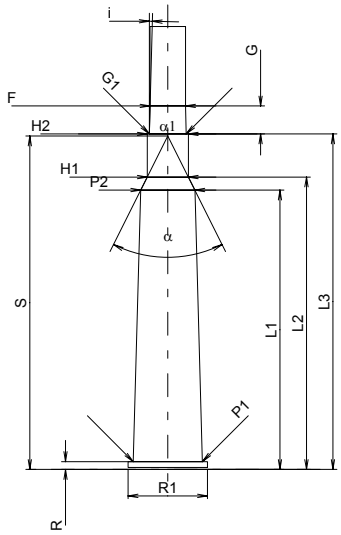

Scale 1:1.5

CARTRIDGE MAXI

Lengths

L1 *	=	55.40	
L2 *	=	57.99	
L3 1)	=	66.32	
L4	=		
L5	=		
L6	=	87.88	

Case Head

R 1)	=	1.52	-0.25
R1	=	15.49	
R3	=		
E	=		
E1	=		
e min	=		
δ	=		
f	=	0.30	
β	=	45°	

Powder Chamber

P1	=	13.69
P2 *	=	10.72

Junction Cone

α	=	53°07'48"
S	=	66.12
r1 min	=	
r2	=	

Collar

H1 *	=	8.13
H2 1)	=	8.13

Projectile

G1 1)	=	7.29
G2	=	
F	=	
L3+G 1)	=	71.86

Pressures (Energies)
Method Transducer

Pmax	=	2950	bar
PK	=	3393	bar
PE	=	3690	bar
M	=	25.00	
EE	=	3550	Joule

Miscellaneous Dimensions

Fe 1)	=	0.15
delta L	=	

CHAMBER MINI

Lengths

L1 *	=	55.42
L2 *	=	58.01
L3 1)	=	66.57

Breech

R 1)	=	1.55
R1	=	15.75
R2	=	
R3	=	
r	=	

Powder Chamber

E	=	
P1 1)	=	13.72
P2 *	=	10.74

Junction Cone

α	=	53°07'48"
S	=	66.16
r1 max	=	
r2	=	

Collar

H1 *	=	8.15
H2 1)	=	8.15

Commencement of Rifling

G1 1)*	=	7.34
G 1)*	=	5.54
α1	=	180°
h	=	
s	=	
i 1)	=	1°30'
w	=	

Barrel

F 1)*	=	7.05
Z 1)	=	7.30

Grooves

b	=		
N	=		
u	=	255.00	
Q	=	39.04	mm²

Dimensions in << mm >>
Dimensions and Tolerances for Proof Barrels
see Appendix CR 1.

Notes: 1) Check for safety reasons
* Basic dimensions

Reproduction forbidden as well as in the form of extracts without approval of C.I.P.