C.I.P.	45 GAP Country of Origin: AT	TAB. IV Date 03-06-05 Revision 11-05-25

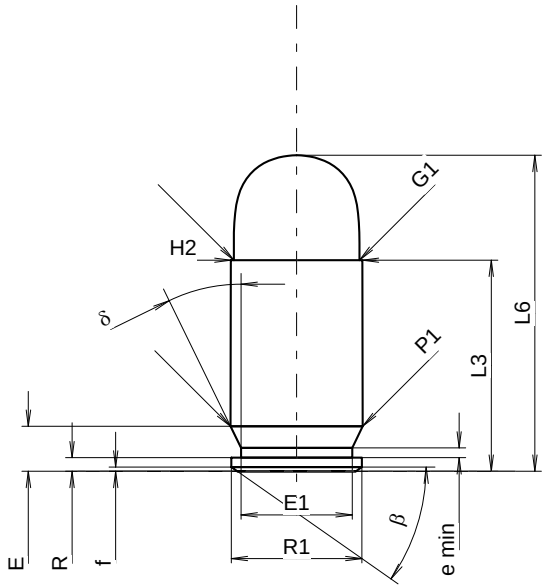

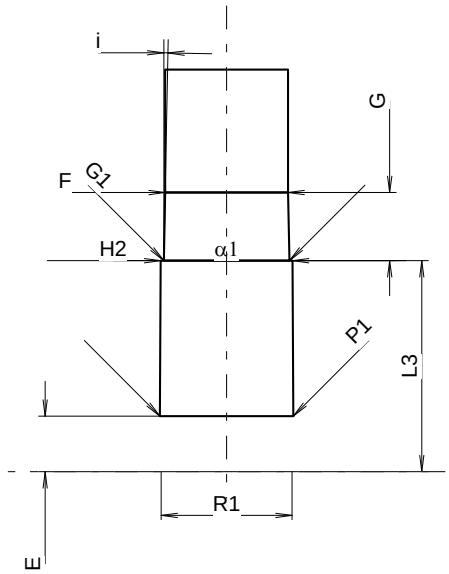

Scale 1.45:1

CARTRIDGE MAXI

Lengths

L1	=		
L2	=		
L3 1)	=	19.30	-0.25
L4	=		
L5	=		
L6	=	28.89	

Case Head

R	=	1.24
R1	=	11.94
R3	=	
E	=	4.11
E1	=	10.16
e min	=	0.89
δ	=	26°
f	=	0.38
β	=	35°

Powder Chamber

P1	=	12.09
P2	=	

Junction Cone

α	=	
S	=	
r1 min	=	
r2	=	

Collar

H1	=	
H2 1)	=	12.01

Projectile

G1 1)	=	11.48
G2	=	
F	=	
L3+G 1)	=	25.53

Pressures (Energies)
Method Transducer

Pmax	=	1300	bar
PK	=	1495	bar
PE	=	1690	bar
M	=	10.50	

Miscellaneous Dimensions

Fe 1)6)	=	0.30
delta L	=	

CHAMBER MINI

Lengths

L1	=	
L2	=	
L3 1)	=	19.30

Breech

R	=	
R1	=	11.97
R2	=	
R3	=	
r	=	

Powder Chamber

E	=	5.08
P1 1)	=	12.18
P2	=	

Junction Cone

α	=	
S	=	
r1 max	=	
r2	=	

Collar

H1	=	
H2 1)	=	12.04

Commencement of Rifling

G1 1)*	=	11.48
G 1)*	=	6.23
α1	=	180°
h	=	
s	=	
i 1)	=	1°09'
w	=	

Barrel

F 1)*	=	11.23
Z 1)	=	11.43

Grooves

b	=	3.73	
N	=	6	
u	=	406.00	
Q	=	101.33	mm²

Dimensions in << mm >>
Dimensions and Tolerances for Proof Barrels
see Appendix CR 1.

Notes:
1) Check for safety reasons
6) Headspace on Case Mouth
* Basic dimensions