C.I.P.	7,5 FK Country of Origin: CZ	TAB.	IV
		Date	15-05-19
		Revision	20-11-10

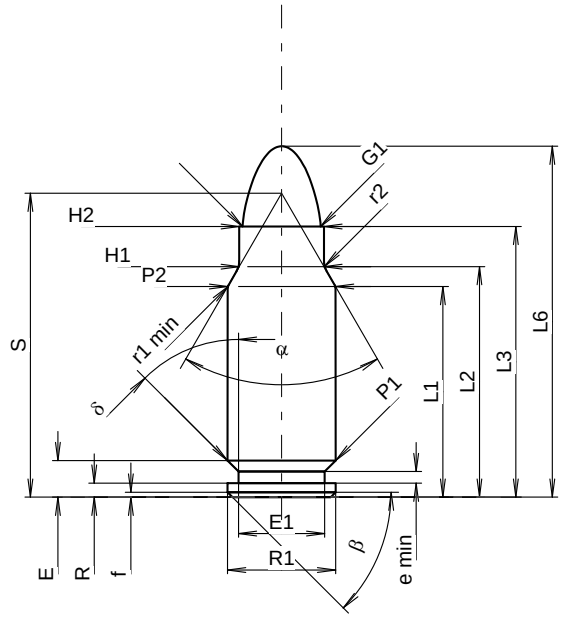

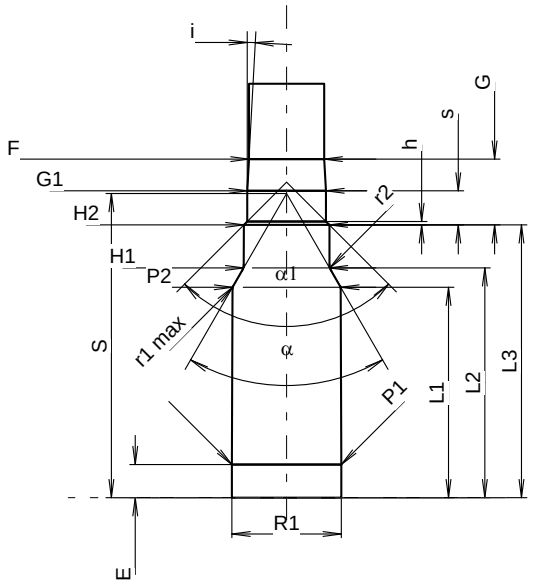

Scale 1.33:1

CARTRIDGE MAXI

Lengths

L1 1)	=	21.01	-0.20
L2 1)	=	23.00	-0.20
L3 1)	=	27.00	
L4	=		
L5	=		
L6	=	35.00	

Case Head

R	=	1.40
R1	=	10.80
R3	=	
E	=	3.65
E1	=	8.60
e min	=	1.15
δ	=	45°
f	=	0.50
β	=	45°

Powder Chamber

P1	=	10.80	
P2 1)*	=	10.75	-0.15

Junction Cone

α *	=	60°
S *	=	30.31
r1 min	=	0.50
r2	=	2.00

Collar

H1 *	=	8.45
H2 1)	=	8.45

Projectile

G1 1)	=	7.80
G2	=	
F	=	
L3+G 1)	=	33.57

Pressures (Energies)
Method Transducer

Pmax	=	3500	bar
PK	=	4025	bar
PE	=	4550	bar
M	=	17.50	

Miscellaneous Dimensions

Fe 1)3)	=	0.20
delta L	=	0.02

CHAMBER MINI

Lengths

L1	=	20.98
L2	=	22.92
L3 1)	=	27.20

Breech

R	=	
R1	=	10.90
R2	=	
R3	=	
r	=	

Powder Chamber

E	=	3.30
P1 1)	=	10.90
P2 *	=	10.80

Junction Cone

α 1)*	=	60°
S *	=	30.33
r1 max	=	0.50
r2	=	1.30

Collar

H1 *	=	8.56
H2 1)	=	8.53

Commencement of Rifling

G1 1)*	=	7.85
G 1)	=	6.57
α1	=	90°
h	=	0.34
s *	=	3.40
i 1)*	=	3°04'11"
w	=	

Barrel

F 1)*	=	7.51
Z 1)	=	7.77

Grooves

b	=	3.75	
N	=	4	
u	=	270.00	
Q	=	46.33	mm²

Dimensions in << mm >>
Dimensions and Tolerances for Proof Barrels
see Appendix CR1.

Notes:
1) Check for safety reasons
3) Headspace on Shoulder
* Basic dimensions