C.I.P.	7,63 Mauser Country of Origin: DE	TAB.	IV
		Date	84-06-14
		Revision	06-09-19

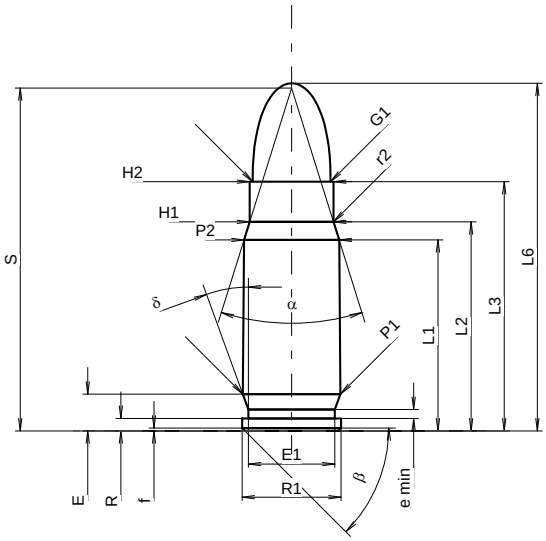

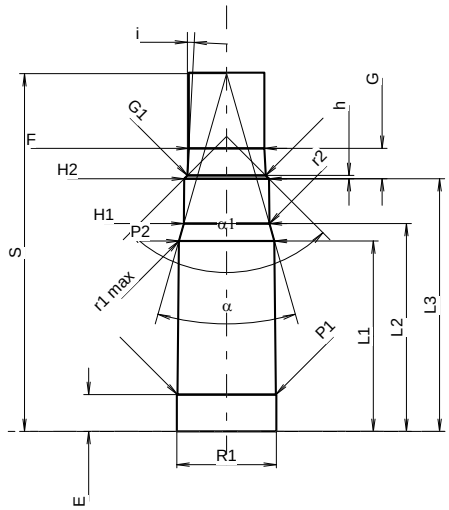

Scale 1.31:1

CARTRIDGE MAXI

Lengths

L1 1)*	=	19.28	-0.20
L2 1)*	=	21.10	-0.20
L3 1)	=	25.15	
L4	=		
L5	=		
L6	=	35.08	

Case Head

R	=	1.27
R1	=	9.98
R3	=	
E	=	3.72
E1	=	8.73
e min	=	0.90
δ	=	20°
f	=	0.30
β	=	45°

Powder Chamber

P1	=	9.86	
P2 1)*	=	9.60	-0.20

Junction Cone

α	=	34°46'47"
S	=	34.61
r1 min	=	
r2	=	2.50

Collar

H1 *	=	8.46
H2 1)	=	8.46

Projectile

G1 1)	=	7.86
G2	=	
F	=	
L3+G 1)	=	28.22

Pressures (Energies)
Method Transducer

Pmax	=	2250	bar
PK	=	2588	bar
PE	=	2925	bar
M	=	17.50	

Miscellaneous Dimensions

Fe 1)3)	=	0.20
delta L	=	

CHAMBER MINI

Lengths

L1 *	=	19.21
L2 *	=	20.98
L3 1)	=	25.50

Breech

R	=	1.27
R1	=	10.03
R2	=	
R3	=	
r	=	

Powder Chamber

E	=	3.72
P1 1)	=	9.93
P2 *	=	9.64

Junction Cone

α 1)	=	31°50'53"
S	=	36.10
r1 max	=	2.50
r2	=	2.50

Collar

H1 *	=	8.63
H2 1)	=	8.55

Commencement of Rifling

G1 1)*	=	7.90
G 1)*	=	3.07
α1	=	90°
h *	=	0.33
s	=	
i 1)	=	2°55'30"
w	=	

Barrel

F 1)*	=	7.62
Z 1)	=	7.85

Grooves

b	=	2.65	
N	=	6	
u	=	250.00	
Q	=	47.47	mm²

Dimensions in << mm >>
Dimensions and Tolerances for Proof Barrels
see Appendix CR 1.

Notes:
1) Check for safety reasons
3) Headspace on Shoulder
* Basic dimensions