| C.I.P. | 9-45 VAC<br>Country of Origin: FR | TAB. IV<br>Date 21-04-07<br>Revision |
|---|---|---|

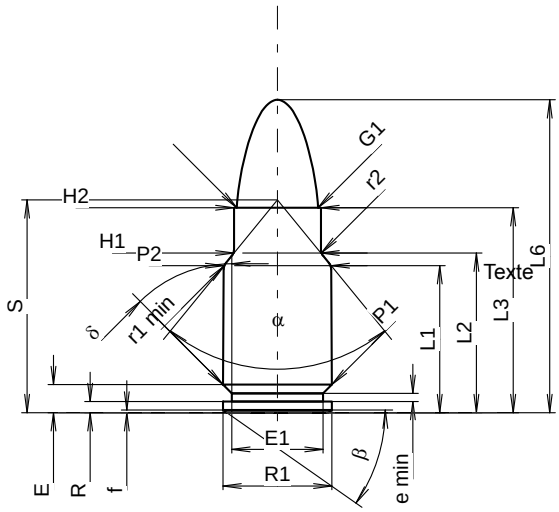


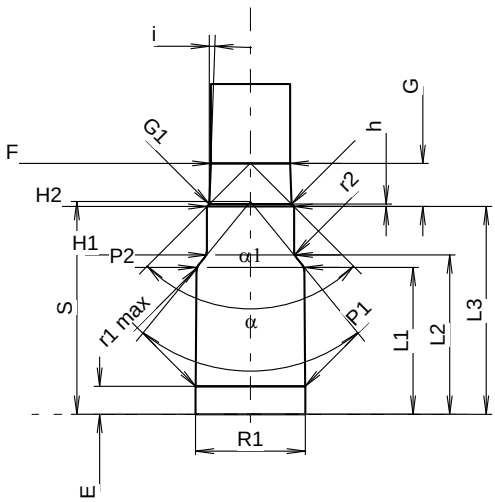


Scale 1.19:1

## CARTRIDGE MAXI

**Lengths**

| | | | |
|---|---|---|---|
| L1 1) | = | 16.35 | -0.20 |
| L2 1) | = | 17.75 | -0.20 |
| L3 1) | = | 22.80 | |
| L4 | = | | |
| L5 | = | | |
| L6 | = | 34.78 | |

**Case Head**

| | | |
|---|---|---|
| R | = | 1.24 |
| R1 | = | 12.10 |
| R3 | = | |
| E | = | 3.12 |
| E1 | = | 10.15 |
| e min | = | 0.90 |
| δ | = | 45° |
| f | = | 0.30 |
| β | = | 35° |

**Powder Chamber**

| | | | |
|---|---|---|---|
| P1 | = | 12.10 | |
| P2 1)* | = | 11.94 | -0.20 |

**Junction Cone**

| | | |
|---|---|---|
| α * | = | 78°30' |
| S * | = | 23.66 |
| r1 min | = | 1.20 |
| r2 | = | 1.20 |

**Collar**

| | | |
|---|---|---|
| H1 * | = | 9.65 |
| H2 1) | = | 9.65 |

**Projectile**

| | | |
|---|---|---|
| G1 1) | = | 9.03 |
| G2 | = | |
| F | = | |
| L3+G 1) | = | 27.59 |

**Pressures (Energies)**
**Method Transducer**

| | | | |
|---|---|---|---|
| Pmax | = | 2350 | bar |
| PK | = | 2703 | bar |
| PE | = | 3055 | bar |
| M | = | 12.50 | |

**Miscellaneous Dimensions**

| | | |
|---|---|---|
| Fe 1)3) | = | 0.20 |
| delta L | = | |

## CHAMBER MINI

**Lengths**

| | | |
|---|---|---|
| L1 | = | 16.33 |
| L2 | = | 17.72 |
| L3 1) | = | 23.10 |

**Breech**

| | | |
|---|---|---|
| R | = | 1.24 |
| R1 | = | 12.22 |
| R2 | = | |
| R3 | = | |
| r | = | |

**Powder Chamber**

| | | |
|---|---|---|
| E | = | 3.12 |
| P1 1) | = | 12.15 |
| P2 * | = | 11.98 |

**Junction Cone**

| | | |
|---|---|---|
| α 1)* | = | 78°30' |
| S * | = | 23.66 |
| r1 max | = | 1.20 |
| r2 | = | 1.50 |

**Collar**

| | | |
|---|---|---|
| H1 * | = | 9.70 |
| H2 1) | = | 9.68 |

**Commencement of Rifling**

| | | |
|---|---|---|
| G1 1)* | = | 9.13 |
| G 1) | = | 4.79 |
| α1 * | = | 90° |
| h | = | 0.28 |
| s | = | |
| i 1)* | = | 1°58'06" |
| w | = | |

**Barrel**

| | | |
|---|---|---|
| F 1)* | = | 8.82 |
| Z 1) | = | 9.02 |

**Grooves**

| | | | |
|---|---|---|---|
| b | = | 2.49 | |
| N | = | 6 | |
| u | = | 250.00 | |
| Q | = | 62.61 | mm² |

Dimensions in << mm >>
Dimensions and Tolerances for Proof Barrels
see Appendix CR 1.

Notes:
1) Check for safety reasons
3) Headspace on Shoulder
* Basic dimensions