C.I.P.	9 x 22 MJR Country of Origin: AT	TAB.	IV
		Date	93-12-13
		Revision	08-09-23

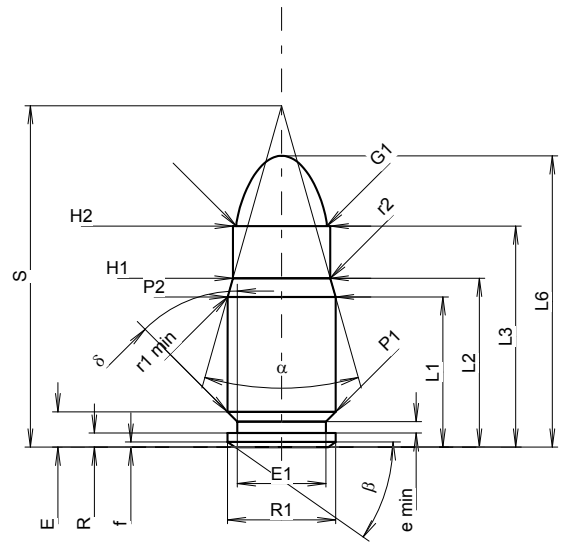

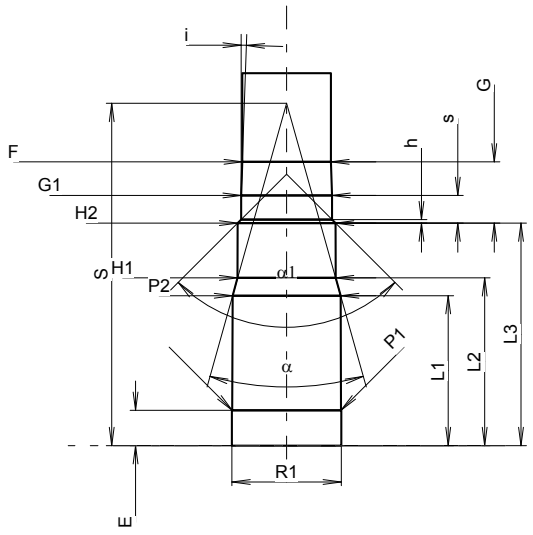

Scale 1.33:1

CARTRIDGE MAXI

Lengths

L1 1)*	=	14.95	-0.20
L2 1)*	=	16.81	-0.20
L3 1)	=	22.00	
L4	=		
L5	=		
L6	=	29.00	

Case Head

R	=	1.40
R1	=	10.77
R3	=	
E	=	3.52
E1	=	8.81
e min	=	1.14
δ	=	45°
f	=	0.51
β	=	35°

Powder Chamber

P1	=	10.77	
P2 1)*	=	10.74	-0.20

Junction Cone

α	=	31°31'27"
S	=	33.98
r1 min	=	0.50
r2	=	0.50

Collar

H1 *	=	9.69
H2 1)	=	9.68

Projectile

G1 1)	=	9.03
G2	=	
F	=	
L3+G 1)	=	28.10

Pressures (Energies)
Method Transducer

Pmax	=	2550	bar
PK	=	2933	bar
PE	=	3315	bar
M	=	12.50	

Miscellaneous Dimensions

Fe 1)3)	=	0.20
delta L	=	

CHAMBER MINI

Lengths

L1 *	=	14.92
L2 *	=	16.70
L3 1)	=	22.15

Breech

R	=	
R1	=	10.88
R2	=	
R3	=	
r	=	

Powder Chamber

E	=	3.52
P1 1)	=	10.82
P2 *	=	10.76

Junction Cone

α 1)	=	31°22'48"
S	=	34.07
r1 max	=	
r2	=	

Collar

H1 *	=	9.76
H2 1)	=	9.75

Commencement of Rifling

G1 1)*	=	9.05
G 1)*	=	6.10
α1	=	90°
h	=	0.35
s *	=	2.75
i 1)	=	1°57'58"
w	=	

Barrel

F 1)*	=	8.82
Z 1)	=	9.02

Grooves

b	=	2.49	
N	=	6	
u	=	250.00	
Q	=	62.61	mm²

Dimensions in << mm >>
Dimensions and Tolerances for Proof Barrels
see Appendix CR 1.

Notes:
1) Check for safety reasons
3) Headspace on Shoulder
* Basic dimensions