C.I.P.	30 PICRA Country of Origin: CZ	TAB.	IV
		Date	99-04-20
		Revision	00-06-07

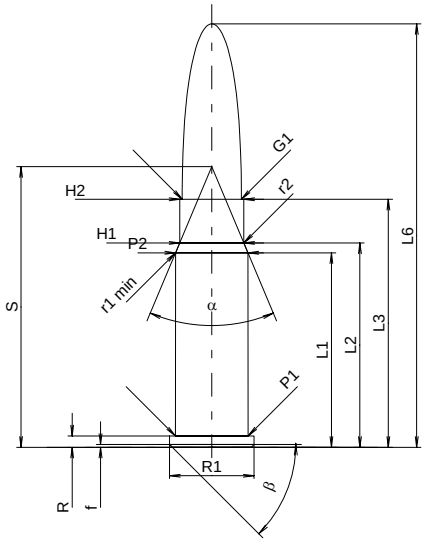

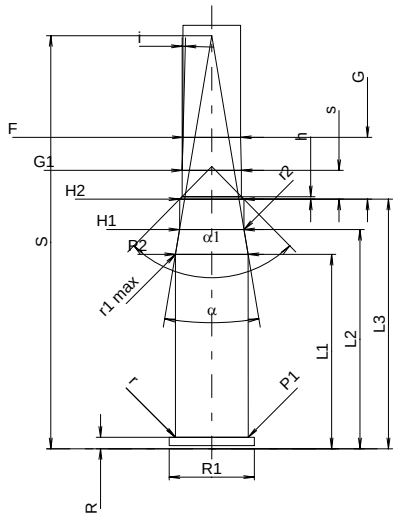

Scale 1:1

CARTRIDGE MAXI

Lengths

L1 1)*	=	25.72	-0.20
L2 1)*	=	27.03	-0.20
L3 1)	=	32.80	
L4	=		
L5	=		
L6	=	56.00	

Case Head

R	=	1.50
R1	=	11.18
R3	=	
E	=	
E1	=	
e min	=	
δ	=	
f	=	0.38
β	=	45°

Powder Chamber

P1	=	9.60	
P2 1)*	=	9.57	-0.20

Junction Cone

α	=	45°33'
S	=	37.12
r1 min	=	0.76
r2	=	2.54

Collar

H1 *	=	8.47
H2 1)	=	8.47

Projectile

G1 1)	=	7.82
G2	=	
F	=	
L3+G 1)	=	40.99

Pressures (Energies)
Method Transducer

Pmax	=	2800	bar
PK	=	3220	bar
PE	=	3640	bar
M	=	17.50	

Miscellaneous Dimensions

Fe 1)	=	0.15
delta L	=	

CHAMBER MINI

Lengths

L1 *	=	25.70
L2 *	=	28.98
L3 1)	=	33.00

Breech

R	=	1.52
R1	=	11.28
R2	=	
R3	=	
r	=	0.20

Powder Chamber

E	=	
P1 1)	=	9.63
P2 *	=	9.61

Junction Cone

α 1)	=	18°52'05"
S	=	54.62
r1 max	=	0.50
r2	=	0.50

Collar

H1 *	=	8.52
H2 1)	=	8.50

Commencement of Rifling

G1 1)*	=	7.85
G 1)*	=	8.19
α1	=	89°07'31"
h	=	0.33
s *	=	3.80
i 1)	=	1°30'02"
w	=	

Barrel

F 1)*	=	7.62
Z 1)	=	7.82

Grooves

b	=	4.49	
N	=	4	
u	=	254.00	
Q	=	47.52	mm²

Dimensions in << mm >>
Dimensions and Tolerances for Proof Barrels
see Appendix CR 1.

Notes: 1) Check for safety reasons
* Basic dimensions

Reproduction forbidden as well as in the form of extracts without approval of C.I.P.