C.I.P.	30-357 AeT Country of Origin: IT	TAB. IV Date 00-09-12 Revision 02-05-15

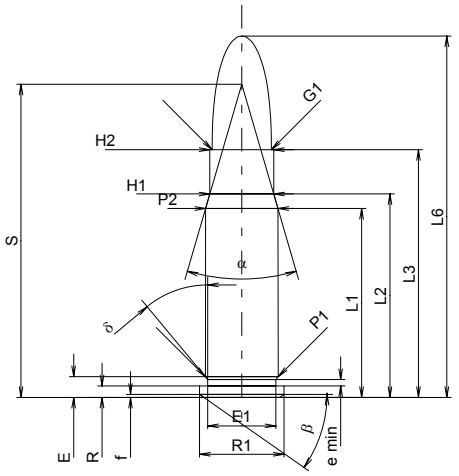

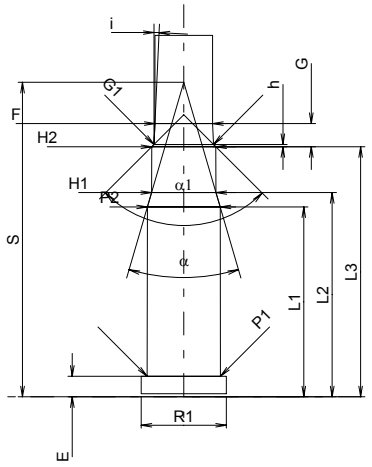

Scale 1:1

CARTRIDGE MAXI

Lengths

L1 1)*	=	24.98	-0.20
L2 1)*	=	26.90	-0.20
L3 1)	=	32.77	
L4	=		
L5	=		
L6	=	47.80	

Case Head

R	=	1.52
R1	=	11.18
R3	=	
E	=	2.74
E1	=	9.00
e min	=	0.84
δ	=	40°
f	=	0.40
β	=	35°

Powder Chamber

P1	=	9.63	
P2 1)*	=	9.58	-0.20

Junction Cone

α	=	32°31'13"
S	=	41.40
r1 min	=	
r2	=	

Collar

H1 *	=	8.46
H2 1)	=	8.46

Projectile

G1 1)	=	7.85
G2	=	
F	=	
L3+G 1)	=	35.84

Pressures (Energies)
Method Transducer

Pmax	=	3000	bar
PK	=	3450	bar
PE	=	3900	bar
M	=	17.50	

Miscellaneous Dimensions

Fe 1)	=	0.15
delta L	=	

CHAMBER MINI

Lengths

L1 *	=	25.11
L2 *	=	27.01
L3 1)	=	33.07

Breech

R	=	1.52
R1	=	11.28
R2	=	
R3	=	
r	=	

Powder Chamber

E	=	2.72
P1 1)	=	9.68
P2 *	=	9.63

Junction Cone

α 1)	=	32°34'01"
S	=	41.59
r1 max	=	
r2	=	

Collar

H1 *	=	8.52
H2 1)	=	8.49

Commencement of Rifling

G1 1)*	=	7.87
G 1)*	=	3.07
α1	=	90°
h *	=	0.31
s	=	
i 1)	=	2°35'35"
w	=	

Barrel

F 1)*	=	7.62
Z 1)	=	7.82

Grooves

b	=	4.24	
N	=	4	
u	=	304.80	
Q	=	47.67	mm²

Dimensions in << mm >>
Dimensions and Tolerances for Proof Barrels
see Appendix CR 1.

Notes: 1) Check for safety reasons
* Basic dimensions