C.I.P.	357 Auto Mag.	TAB.	IV
		Date	84-06-14
	Country of Origin: US	Revision	08-09-23

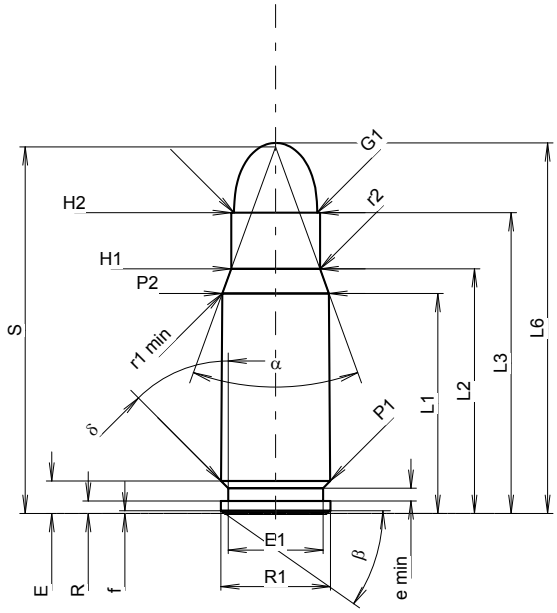

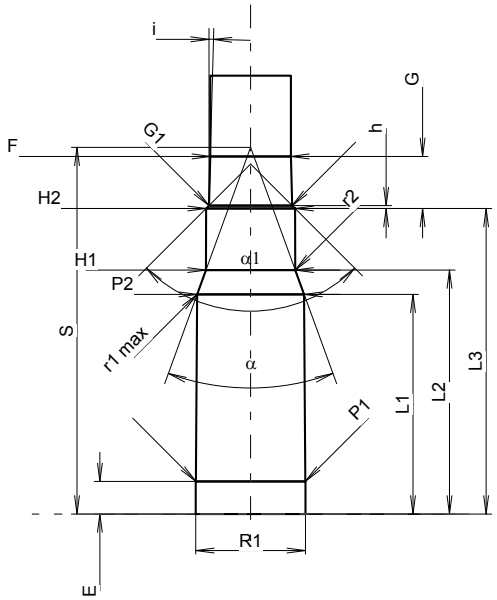

Scale 1.21:1

CARTRIDGE MAXI

Lengths

L1 1)	=	24.13	-0.20
L2 1)	=	26.83	-0.20
L3 1)	=	33.00	
L4	=		
L5	=		
L6	=	40.65	

Case Head

R	=	1.37
R1	=	12.01
R3	=	
E	=	3.56
E1	=	10.40
e min	=	1.40
δ	=	45°
f	=	0.30
β	=	35°

Powder Chamber

P1	=	11.97	
P2 1)*	=	11.71	-0.20

Junction Cone

α *	=	40°
S *	=	40.22
r1 min	=	1.00
r2	=	3.20

Collar

H1 *	=	9.75
H2 1)	=	9.75

Projectile

G1 1)	=	9.12
G2	=	
F	=	
L3+G 1)	=	38.73

Pressures (Energies)
Method Transducer

Pmax	=	2550	bar
PK	=	2933	bar
PE	=	3315	bar
M	=	17.50	

Miscellaneous Dimensions

Fe 1)3)	=	0.15
delta L	=	

CHAMBER MINI

Lengths

L1	=	24.09
L2	=	26.76
L3 1)	=	33.50

Breech

R	=	1.37
R1	=	12.04
R2	=	
R3	=	
r	=	

Powder Chamber

E	=	3.56
P1 1)	=	11.99
P2 *	=	11.74

Junction Cone

α 1)*	=	40°
S *	=	40.22
r1 max	=	1.00
r2	=	3.20

Collar

H1 *	=	9.80
H2 1)	=	9.78

Commencement of Rifling

G1 1)*	=	9.13
G 1)	=	5.73
α1 *	=	90°
h	=	0.32
s	=	
i 1)*	=	1°32'17"
w	=	

Barrel

F 1)*	=	8.84
Z 1)	=	9.09

Grooves

b	=	2.69	
N	=	6	
u	=	457.00	
Q	=	63.42	mm²

Dimensions in << mm >>
Dimensions and Tolerances for Proof Barrels
see Appendix CR 1.

Notes:
1) Check for safety reasons
3) Headspace on Shoulder
* Basic dimensions