C.I.P.	7x49 GJW Country of Origin: DE	TAB.	IV
		Date	91-02-19
		Revision	08-09-23

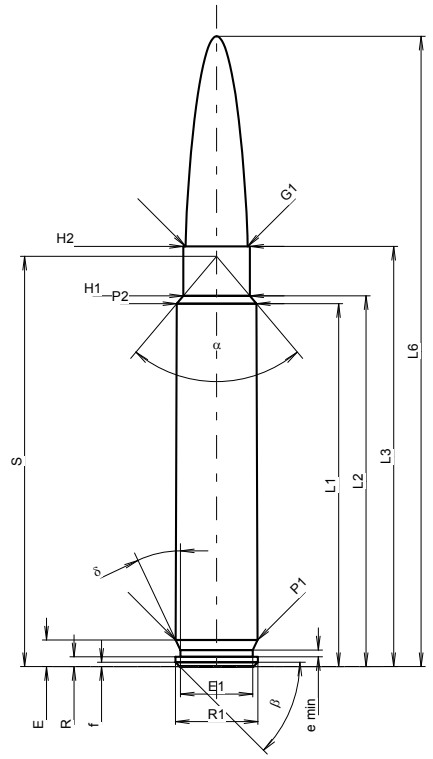

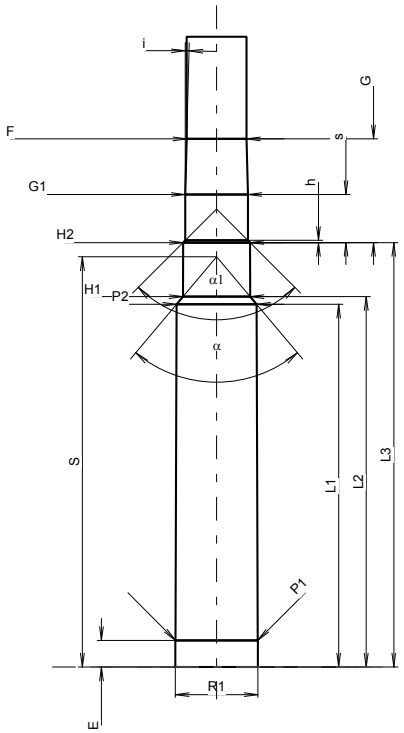

Scale 1.13:1

CARTRIDGE MAXI

Lengths

L1 1)*	=	42.32	-0.20
L2 1)*	=	43.23	-0.20
L3 1)	=	49.00	
L4	=		
L5	=		
L6	=	73.50	

Case Head

R	=	1.14
R1	=	9.60
R3	=	
E	=	3.10
E1	=	8.44
e min	=	0.80
δ	=	25°22'18"
f	=	0.50
β	=	45°

Powder Chamber

P1	=	9.54	
P2 1)*	=	9.30	-0.20

Junction Cone

α	=	80°06'18"
S	=	47.85
r1 min	=	
r2	=	

Collar

H1 *	=	7.77
H2 1)	=	7.77

Projectile

G1 1)	=	7.25
G2	=	
F	=	
L3+G 1)	=	61.09

Pressures (Energies)
Method Transducer

Pmax	=	4400	bar
PK	=	5060	bar
PE	=	5720	bar
M	=	25.00	

Miscellaneous Dimensions

Fe 1)6)	=	0.10
delta L	=	

CHAMBER MINI

Lengths

L1 *	=	42.30
L2 *	=	43.19
L3 1)	=	49.50

Breech

R	=	1.14
R1	=	9.63
R2	=	
R3	=	
r	=	

Powder Chamber

E	=	3.10
P1 1)	=	9.57
P2 *	=	9.33

Junction Cone

α 1)	=	80°14'27"
S	=	47.84
r1 max	=	
r2	=	

Collar

H1 *	=	7.83
H2 1)	=	7.80

Commencement of Rifling

G1 1)*	=	7.30
G 1)*	=	12.09
α1	=	90°
h	=	0.25
s *	=	5.60
i 1)	=	1°30'
w	=	

Barrel

F 1)*	=	6.96
Z 1)	=	7.20

Grooves

b	=	3.70	
N	=	4	
u	=	228.00	
Q	=	39.91	mm²

Dimensions in << mm >>
Dimensions and Tolerances for Proof Barrels
see Appendix CR 1.

Notes:
1) Check for safety reasons
6) Headspace on Case Mouth
* Basic dimensions