C.I.P.	38 Spl. AMU Country of Origin: US	TAB.	IV
		Date	84-06-14
		Revision	08-09-23

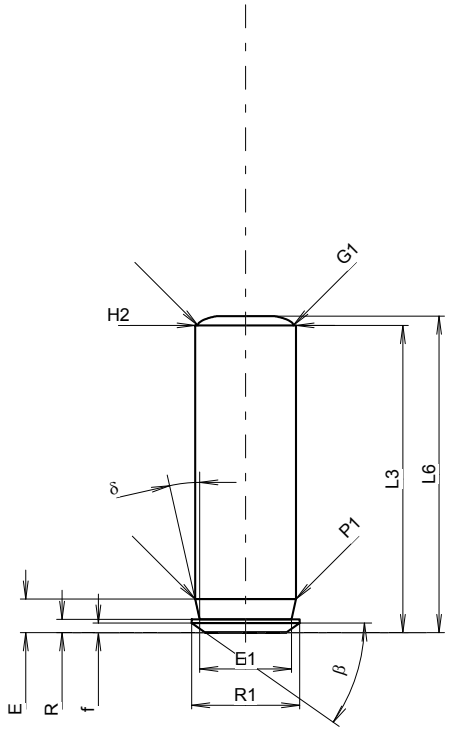

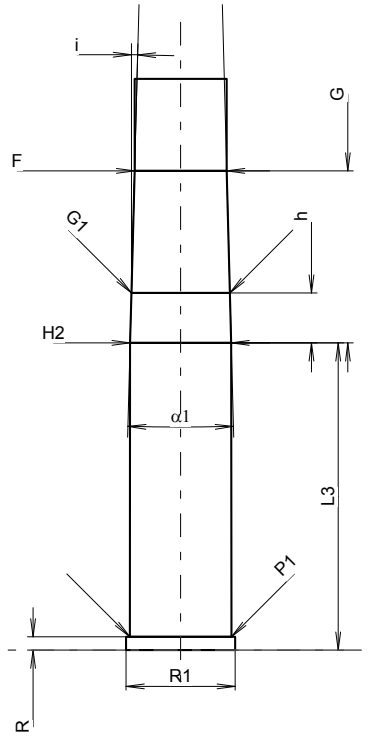

Scale 1.39:1

CARTRIDGE MAXI

Lengths

L1	=		
L2	=		
L3 1)	=	29.34	
L4	=		
L5	=		
L6	=	30.23	

Case Head

R 1)	=	1.27	-0.25
R1	=	10.31	
R3	=		
E	=	3.20	
E1	=	8.76	
e min	=		
δ	=	12°42'05"	
f	=	0.91	
β	=	35°	

Powder Chamber

P1	=	9.63
P2	=	

Junction Cone

α	=	
S	=	
r1 min	=	
r2	=	

Collar

H1	=	
H2 1)	=	9.63

Projectile

G1 1)	=	9.11
G2	=	
F	=	
L3+G 1)	=	45.76

Pressures (Energies)
Method Transducer

Pmax	=	1250	bar
PK	=	1438	bar
PE	=	1625	bar
M	=	10.50	

Miscellaneous Dimensions

Fe 1)4)	=	0.25
delta L	=	

CHAMBER MINI

Lengths

L1	=	
L2	=	
L3 1)	=	29.34

Breech

R 1)	=	1.27
R1	=	10.41
R2	=	
R3	=	
r	=	

Powder Chamber

E	=	
P1 1)	=	9.71
P2	=	

Junction Cone

α	=	
S	=	
r1 max	=	
r2	=	

Collar

H1	=	
H2 1)	=	9.65

Commencement of Rifling

G1 1)*	=	9.40	
G 1)	=	16.42	
α1 *	=	3°	
h	=	4.77	
s	=		
i 1)*	=	1°30'	
w	=		

Barrel

F 1)*	=	8.79
Z 1)	=	9.02

Grooves

b	=	3.07	
N	=	6	
u	=	356.00	
Q	=	62.85	mm²

Dimensions in << mm >>
Dimensions and Tolerances for Proof Barrels
see Appendix CR 1.

Notes:
1) Check for safety reasons
4) Headspace on Rim
* Basic dimensions