C.I.P.	38/357 FX Country of Origin: CA	TAB. IV Date 98-01-27 Revision 00-06-07

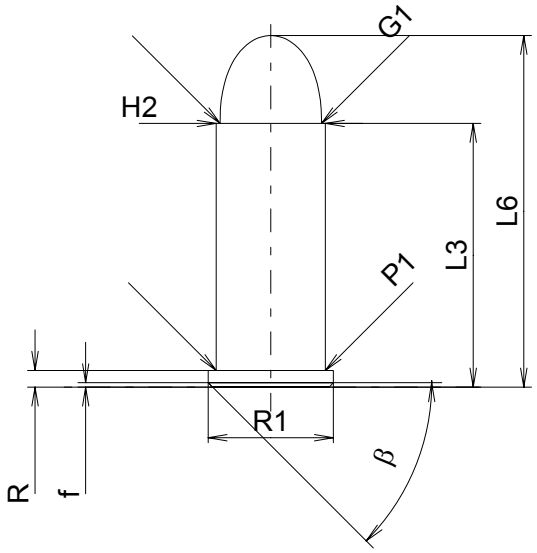

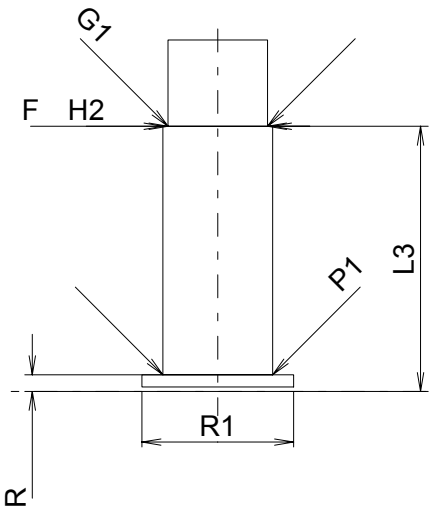

Scale 1.5:1

CARTRIDGE MAXI

Lengths

L1	=		
L2	=		
L3 1)	=	23.24	
L4	=		
L5	=		
L6	=	30.99	

Case Head

R 1)	=	1.47	-0.25
R1	=	11.05	
R3	=		
E	=		
E1	=		
e min	=		
δ	=		
f	=	0.38	
β	=	45°	

Powder Chamber

P1	=	9.63
P2	=	

Junction Cone

α	=	
S	=	
r1 min	=	
r2	=	

Collar

H1	=	
H2 1)	=	9.63

Projectile

G1 1)	=	8.94
G2	=	
F	=	
L3+G	=	

Pressures (Energies)
Method Transducer

Pmax	=	350	bar
PK	=	403	bar
PE	=	455	bar
M	=	12.50	

Miscellaneous Dimensions

Fe 1)	=	0.25
delta L	=	

CHAMBER MINI

Lengths

L1	=	
L2	=	
L3 1)	=	23.38

Breech

R 1)	=	1.47
R1	=	13.38
R2	=	
R3	=	
r	=	

Powder Chamber

E	=	
P1 1)	=	9.68
P2	=	

Junction Cone

α	=	
S	=	
r1 max	=	
r2	=	

Collar

H1	=	
H2 1)	=	9.68

Commencement of Rifling

G1 1)*	=	8.79
G	=	
α1	=	
h	=	
s	=	
i	=	
w	=	

Barrel

F 1)*	=	8.79
Z 1)	=	9.02

Grooves

b	=	2.48	
N	=	6	
u	=	254.00	
Q	=	62.42	mm²

Dimensions in << mm >>
Dimensions and Tolerances for Proof Barrels
see Appendix CR 1.

Notes: 1) Check for safety reasons
* Basic dimensions