C.I.P.	380 Short Country of Origin: GB	TAB.	IV
		Date	84-06-14
		Revision	00-06-07

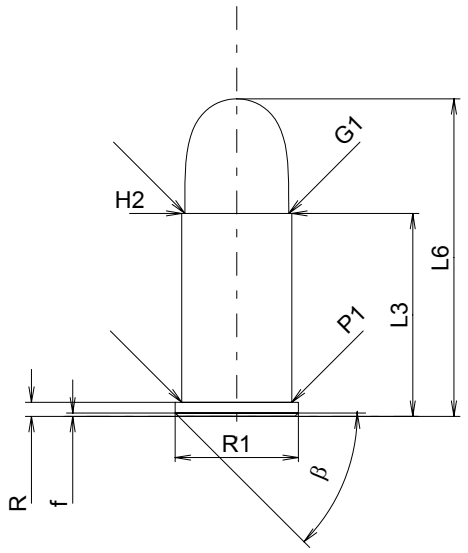

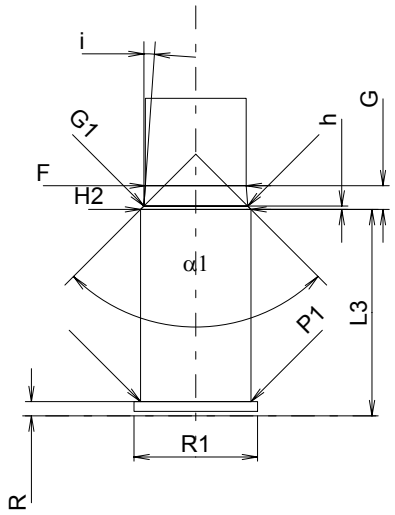

Scale 1.5:1

CARTRIDGE MAXI

Lengths

L1	=		
L2	=		
L3 1)	=	17.90	
L4	=		
L5	=		
L6	=	28.00	

Case Head

R 1)	=	1.25	-0.25
R1	=	10.85	
R3	=		
E	=		
E1	=		
e min	=		
δ	=		
f	=	0.30	
β	=	45°	

Powder Chamber

P1	=	9.70
P2	=	

Junction Cone

α	=	
S	=	
r1 min	=	
r2	=	

Collar

H1	=	
H2 1)	=	9.70

Projectile

G1 1)	=	9.15
G2	=	
F	=	
L3+G 1)	=	19.98

Pressures (Energies)
Method Transducer

Pmax	=	680	bar
PK	=	782	bar
PE	=	884	bar
M	=	10.50	

Miscellaneous Dimensions

Fe 1)	=	0.25
delta L	=	

CHAMBER MINI

Lengths

L1	=	
L2	=	
L3 1)	=	18.20

Breech

R 1)	=	1.25
R1	=	10.90
R2	=	
R3	=	
r	=	

Powder Chamber

E	=	
P1 1)	=	9.75
P2	=	

Junction Cone

α	=	
S	=	
r1 max	=	
r2	=	

Collar

H1	=	
H2 1)	=	9.73

Commencement of Rifling

G1 1)*	=	9.15	
G 1)*	=	2.08	
α1	=	90°	
h *	=	0.29	
s	=		
i 1)	=	3°59'41"	
w	=		

Barrel

F 1)*	=	8.90	
Z 1)	=	9.13	

Grooves

b	=	1.10	
N	=	7	
u	=	400.00	
Q	=	63.10	mm²

Dimensions in << mm >>
Dimensions and Tolerances for Proof Barrels
see Appendix CR 1.

Notes: 1) Check for safety reasons
* Basic dimensions