C.I.P.	41 ACT EXP Country of Origin: IL	TAB. IV Date 86-12-03 Revision 00-06-07

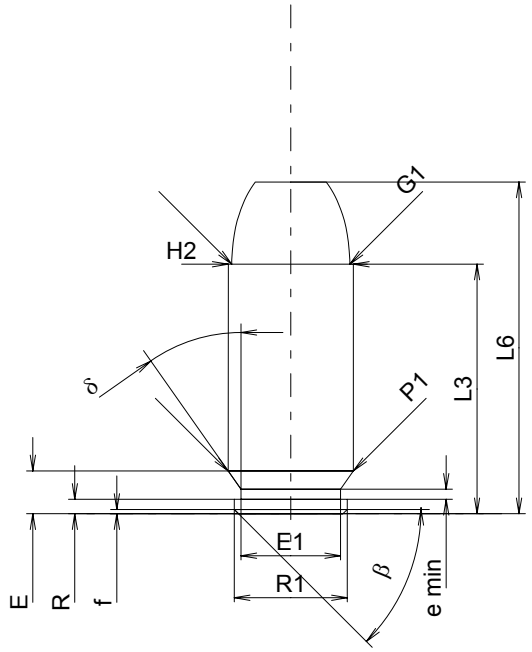

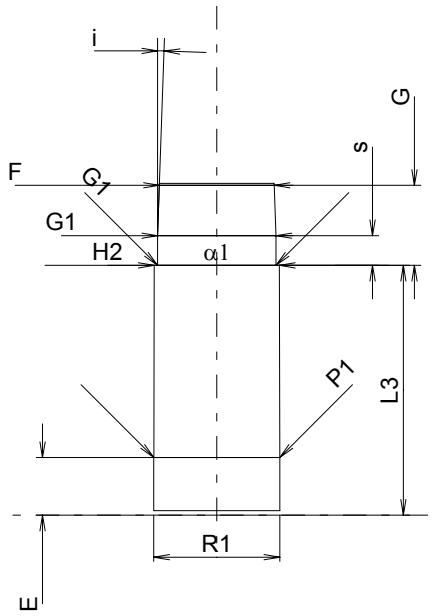

Scale 1.5:1

CARTRIDGE MAXI

Lengths

L1	=		
L2	=		
L3 1)	=	22.00	-0.25
L4	=		
L5	=		
L6	=	29.25	

Case Head

R	=	1.27
R1	=	9.96
R3	=	
E	=	3.77
E1	=	8.79
e min	=	0.89
δ	=	35°
f	=	0.38
β	=	45°

Powder Chamber

P1	=	11.05
P2	=	

Junction Cone

α	=	
S	=	
r1 min	=	
r2	=	

Collar

H1	=	
H2 1)	=	11.03

Projectile

G1 1)	=	10.41
G2	=	
F	=	
L3+G 1)	=	29.06

Pressures (Energies)
Method Transducer

Pmax	=	2250	bar
PK	=	2588	bar
PE	=	2925	bar
M	=	10.50	

Miscellaneous Dimensions

Fe 1)	=	0.30
delta L	=	

CHAMBER MINI

Lengths

L1	=	
L2	=	
L3 1)	=	22.02

Breech

R	=	2.54
R1	=	11.11
R2	=	
R3	=	
r	=	

Powder Chamber

E	=	5.08
P1 1)	=	11.10
P2	=	

Junction Cone

α	=	
S	=	
r1 max	=	
r2	=	

Collar

H1	=	
H2 1)	=	11.05

Commencement of Rifling

G1 1)*	=	10.44
G 1)	=	7.06
α1 *	=	180°
h	=	
s	=	2.62
i 1)*	=	2°
w	=	

Barrel

F 1)*	=	10.13
Z 1)	=	10.39

Grooves

b	=	2.00	
N	=	6	
u	=	360.00	
Q	=	82.17	mm²

Dimensions in << mm >>
Dimensions and Tolerances for Proof Barrels
see Appendix CR 1.

Notes: 1) Check for safety reasons
* Basic dimensions