C.I.P.	450 Short Country of Origin: GB	TAB. IV Date 84-06-14 Revision 00-06-07

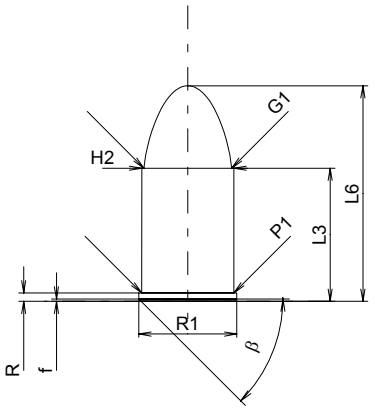

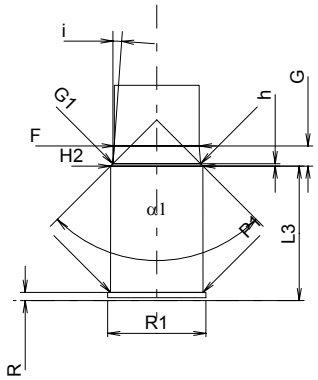

Scale 1:1

CARTRIDGE MAXI

Lengths

L1	=		
L2	=		
L3 1)	=	17.60	
L4	=		
L5	=		
L6	=	28.50	

Case Head

R 1)	=	1.10	-0.25
R1	=	12.95	
R3	=		
E	=		
E1	=		
e min	=		
δ	=		
f	=	0.30	
β	=	45°	

Powder Chamber

P1	=	12.18
P2	=	

Junction Cone

α	=	
S	=	
r1 min	=	
r2	=	

Collar

H1	=	
H2 1)	=	12.17

Projectile

G1 1)	=	11.58
G2	=	
F	=	
L3+G 1)	=	20.27

Pressures (Energies)
Method Transducer

Pmax	=	720	bar
PK	=	828	bar
PE	=	936	bar
M	=	8.00	

Miscellaneous Dimensions

Fe 1)	=	0.25
delta L	=	

CHAMBER MINI

Lengths

L1	=	
L2	=	
L3 1)	=	17.80

Breech

R 1)	=	1.10
R1	=	13.00
R2	=	
R3	=	
r	=	

Powder Chamber

E	=	
P1 1)	=	12.22
P2	=	

Junction Cone

α	=	
S	=	
r1 max	=	
r2	=	

Collar

H1	=	
H2 1)	=	12.20

Commencement of Rifling

G1 1)*	=	11.58	
G 1)*	=	2.67	
α1	=	90°	
h *	=	0.31	
s	=		
i 1)	=	4°	
w	=		

Barrel

F 1)*	=	11.25
Z 1)	=	11.48

Grooves

b	=	3.78	
N	=	5	
u	=	500.00	
Q	=	101.60	mm²

Dimensions in << mm >>
Dimensions and Tolerances for Proof Barrels
see Appendix CR 1.

Notes: 1) Check for safety reasons
* Basic dimensions