| C.I.P. | 7,62 x 25 Tokarev<br>Country of Origin: SU | TAB. | IV |
|---|---|---|---|
| | | Date | 90-04-04 |
| | | Revision | 06-09-19 |

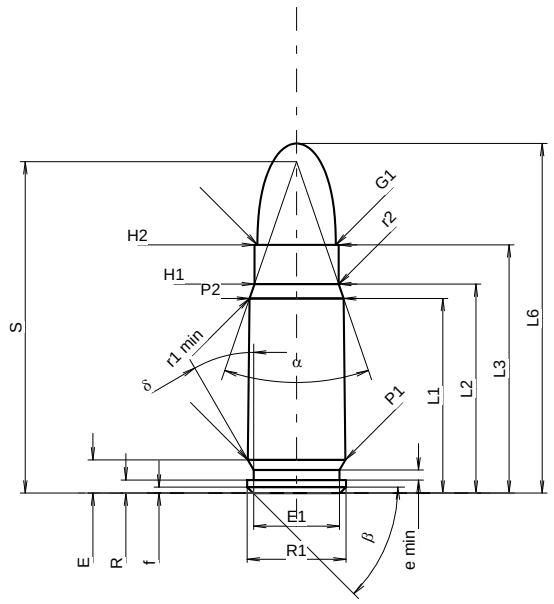


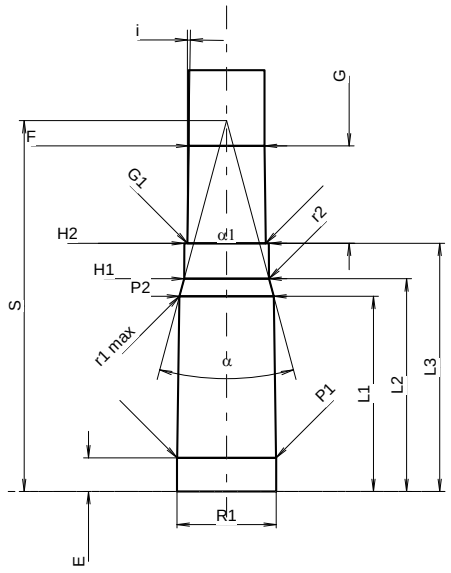


Scale 1.31:1

## CARTRIDGE MAXI

**Lengths**

| | | | |
|---|---|---|---|
| L1 1)* | = | 19.60 | -0.20 |
| L2 1)* | = | 21.04 | -0.20 |
| L3 1) | = | 25.00 | |
| L4 | = | | |
| L5 | = | | |
| L6 | = | 35.20 | |

**Case Head**

| | | |
|---|---|---|
| R | = | 1.32 |
| R1 | = | 9.95 |
| R3 | = | |
| E | = | 3.34 |
| E1 | = | 8.65 |
| e min | = | 1.00 |
| δ | = | 30° |
| f | = | 0.60 |
| β | = | 45° |

**Powder Chamber**

| | | | |
|---|---|---|---|
| P1 | = | 9.83 | |
| P2 1)* | = | 9.48 | -0.20 |

**Junction Cone**

| | | |
|---|---|---|
| α | = | 38° |
| S | = | 33.37 |
| r1 min | = | 0.50 |
| r2 | = | 2.00 |

**Collar**

| | | |
|---|---|---|
| H1 * | = | 8.49 |
| H2 1) | = | 8.49 |

**Projectile**

| | | |
|---|---|---|
| G1 1) | = | 7.90 |
| G2 | = | |
| F | = | |
| L3+G 1) | = | 34.80 |

**Pressures (Energies)**
**Method Transducer**

| | | | |
|---|---|---|---|
| Pmax | = | 2500 | bar |
| PK | = | 2875 | bar |
| PE | = | 3250 | bar |
| M | = | 17.50 | |

**Miscellaneous Dimensions**

| | | |
|---|---|---|
| Fe 1)3) | = | 0.20 |
| delta L | = | |

## CHAMBER MINI

**Lengths**

| | | |
|---|---|---|
| L1 * | = | 19.65 |
| L2 * | = | 21.42 |
| L3 1) | = | 25.00 |

**Breech**

| | | |
|---|---|---|
| R | = | 1.40 |
| R1 | = | 10.00 |
| R2 | = | |
| R3 | = | |
| r | = | |

**Powder Chamber**

| | | |
|---|---|---|
| E | = | 3.40 |
| P1 1) | = | 9.95 |
| P2 * | = | 9.50 |

**Junction Cone**

| | | |
|---|---|---|
| α 1) | = | 30°02'38" |
| S | = | 37.35 |
| r1 max | = | 0.50 |
| r2 | = | 1.00 |

**Collar**

| | | |
|---|---|---|
| H1 * | = | 8.55 |
| H2 1) | = | 8.50 |

**Commencement of Rifling**

| | | |
|---|---|---|
| G1 1)* | = | 7.90 |
| G 1)* | = | 9.80 |
| α1 | = | 180° |
| h | = | |
| s | = | |
| i 1) | = | 0°49'6" |
| w | = | |

**Barrel**

| | | |
|---|---|---|
| F 1)* | = | 7.62 |
| Z 1) | = | 7.92 |

**Grooves**

| | | | |
|---|---|---|---|
| b | = | 3.81 | |
| N | = | 4 | |
| u | = | 240.00 | |
| Q | = | 47.99 | mm² |

Dimensions in << mm >>
Dimensions and Tolerances for Proof Barrels
see Appendix CR 1.

Notes:
1) Check for safety reasons
3) Headspace on Shoulder
* Basic dimensions