C.I.P.	22 Win. Mag. R.F. Country of Origin: US	TAB.	V
		Date	84-06-14
		Revision	08-09-23

Alternative Names: 22 Win.Mag.,22 WMR, 22 Magnum

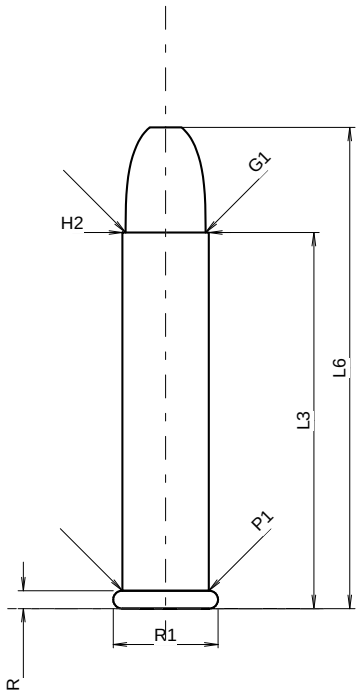

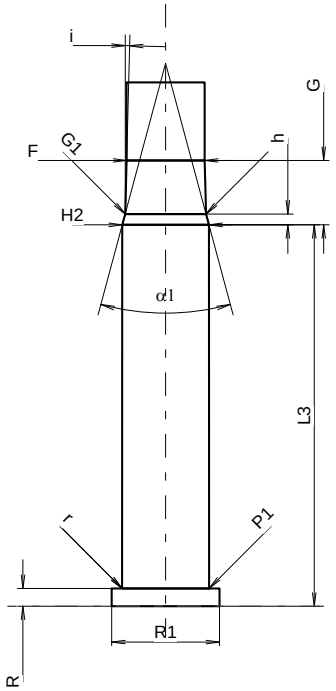

Scale 1.86:1

CARTRIDGE MAXI

Lengths

L1	=		
L2	=		
L3 1)	=	26.80	
L4	=		
L5	=		
L6	=	34.29	

Case Head

R 1)	=	1.27	-0.18
R1	=	7.47	
R3	=		
E	=		
E1	=		
e min	=		
δ	=		
f	=		
β	=		

Powder Chamber

P1	=	6.15
P2	=	

Junction Cone

α	=	
S	=	
r1 min	=	
r2	=	

Collar

H1	=	
H2 1)	=	6.15

Projectile

G1 1)	=	5.70
G2	=	
F	=	
L3+G 1)	=	31.39

Pressures (Energies)
Method Transducer

Pmax	=	1600	bar
PK	=	1840	bar
PE	=	2080	bar
M	=	17.50	

Miscellaneous Dimensions

Fe 1)4)	=	0.20
delta L	=	

CHAMBER MINI

Lengths

L1	=	
L2	=	
L3 1)	=	27.18

Breech

R 1)	=	1.27
R1	=	7.67
R2	=	
R3	=	
r	=	0.25

Powder Chamber

E	=	
P1 1)	=	6.20
P2	=	

Junction Cone

α	=	
S	=	
r1 max	=	
r2	=	

Collar

H1	=	
H2 1)	=	6.17

Commencement of Rifling

G1 *	=	5.76	
G	=	4.59	
α1 *	=	30°	
h	=	0.77	
s	=		
i *	=	1°30'	
w	=		

Barrel

F 1)*	=	5.56	
Z 1)	=	5.69	

Grooves

b	=	1.88	
N	=	6	
u	=	406.00	
Q	=	25.03	mm²

Dimensions in << mm >>
Dimensions and Tolerances for Proof Barrels
see Appendix CR 2.

Notes:
1) Check for safety reasons
4) Headspace on Rim
* Basic dimensions